University Chemistry II Laboratory Manual
Table of Contents

Topic	Page Number
Preface	3
1. Molar Mass Using Freezing Point Depression	5
2. Identify an Unknown Sugar Using Boiling Point Elevation	17
3. Factors that Affect the Reaction Kinetics	27
4. Rate Constant for Iodination of Acetone	39
5. Le-Châtelier's Principle: Shift of Equilibrium	51
6. Kitchen Chemistry	67
7. pH Titration I: K_a of a Weak Monoprotic Acid	77
8. pH Titration II: Titration Curve of a Triprotic Acid	85
9. Solubility Product of a Slightly Soluble Salt	95
10. Thermodynamically Controlled Reaction of Borax	105
11. Electrochemistry: Galvanic Cells and Electroplating	115
How to write a lab report	125
Lab Report format	129
References	125

Preface

I have been authoring laboratory manuals for beginning science classes such as Principles of Chemistry, Physical Science, Earth Science, and University Chemistry I, I learned that a simply designed standard laboratory manual are appreciated by students. I believe that a proper guidance is essential for the beginners of chemistry and want to understand the basic concepts before they pursue further on. When using the currently available laboratory manuals and resources for University Chemistry II course, I felt that there is an observable gap between what is expected from students in a laboratory setting and what is stated in the laboratory manuals. Many times, I have made modifications and provided handouts, specifically for the University Chemistry II laboratory courses. This laboratory manual is a result of feedback and suggestions from my previous chemistry students and is for addressing the issues. I am pleased to bring University Chemistry II Lab Manual intended to bring student performance to an optimum level while in the lab and for preparing the lab report afterward.

This lab manual is customized to the laboratory needs of University Chemistry II, at the University of Arkansas Rich Mountain but can also be used by other college instructors who teach same or similar courses in General/University Chemistry. The experiments in this laboratory manual are designed for a two-hour long session once a week for a fall or a spring semester. Same laboratory exercises can be implemented for twice-a-week schedules for summer courses as well.

I believe that this laboratory manual will provide simple and easy-to-follow instructions for experimental procedures and help students understand the principles of general/university chemistry laboratory activities. It will also help in the proper handling of instruments, apparatus, and chemicals. The stepwise description of experimental procedures and corresponding data sheet pages are meant to provide students with a clear and detailed guidance to gain hands-on experience in each experiment performed. As always, the safety of students is given a high priority while outlaying the steps of experiments; in order to carry out each experiment in the safest environment possible inside any equipped chemistry laboratory.

Gaumani Gyanwali, PhD
University of Arkansas Rich Mountain
Mena, Arkansas 71953
Published: January 2021
Last Revised: January 2024

Experiment 1 | Molar Mass Using Freezing Point Depression

Objective: 1. To find the freezing point of a pure solvent
2. To find the freezing point of the solution by adding a non-volatile solute
3. To calculate the freezing point depression for the solute-solvent system
4. To calculate the molar mass of the solute using the depression of freezing point

Introduction

In this chapter, we will study one of the colligative properties of the solute-solvent system. **Colligative properties** are those physical properties of a solution which depend on the concentration of the solute dissolved in the solvent but not on their nature or type. For example, if we dissolve table salt (NaCl) or potassium salt (KCl) in water we know that the freezing temperature of water will be lower than 0ºC, but to what degree it will be lower does not depend on whether it is NaCl or KCl. It does not matter as long as those two salts dissolved have the same moles. But the concentration of one of the salts being higher or lower does make a difference in the resulting freezing point. The more salt you dissolve, the more lowering of the freezing point. Thus, the colligative properties depend only on the concentration of the solute dissolved, not the molecular build-up of the solute.

Some of the colligative properties you study in Chapter 11 of the textbook are: Lowering of Vapor pressure, Elevation of Boiling Point, Depression of Freezing Point, Osmotic Pressure. These colligative properties have significance in our daily life too. Adding ethylene glycol (solute) to the water of a car radiator causes elevation of boiling point of water thus making the water to boil at a higher temperature than 100ºC, so that it remains in water phase for longer time. Adding salt to the icy roads decreases the melting point of ice so that ice melts at a lower temperature than usual 0ºC and the roads will be free of ice sooner.

The reason that by addition of a solute the freezing point of a solvent decreases is that when you have solute particles in addition of the solvent particles, the solutes keep the solvent particles from coming close to each other in order to pull together to freeze easily at their normal temperature. To freeze the solute-solvent system, further lowering of temperature is needed so that the solution is forced to solidify at this new lower temperature. The solute used must be a non-volatile solute since the volatile (easily evaporating at room temperature, such as acetone) will vaporize coming on the surface.

In this lab, we will study one of the colligative properties which is **depression of freezing point**. Let's say that the original freezing point of a pure solvent (t-butanol, for our lab) is T_{fi} and after addition of certain solute (ethylene glycol, for our lab) the freezing point decreases to T_{ff} (T_f = freezing temperature, $_i$ = initial, $_f$ = final). Then, the depression of freezing point is given by

$$\textbf{Depression of freezing point, } \Delta T_f = T_{ff} - T_{fi} \quad \ldots\ldots\ldots\ldots \textit{Equation (i)}$$

Since the final freezing temperature is always a lower value than the initial freezing temperature, ΔT_f is a negative value. We have another equation relating depression of freezing point to molality of the solution (m) given by

$$\textbf{Molality, } m = \frac{\Delta T_f}{K_f} \ldots\ldots\ldots\ldots\ldots\ldots \textit{Equation (ii)}$$

Where, K_f is the molal freezing point depression constant. This constant is unique to a particular solvent and this constant value is given in the following table for some common solvents used in chemistry laboratory. Also given in the table are actual freezing points for the pure solvents at 1 atm. pressure

Solvent	**Actual freezing point (ºC)**	**K_f (ºC . kg/mol)**
Water	0	1.86
Carbon tetrachloride	-22.99	30.0
t-butanol	25.5	9.1
Acetic acid	16.6	3.9
Benzene	5.5	5.12
Cyclohexane	6.5	20.0
Naphthalene	80.2	6.8
p-dichlorobenzene	53.1	7.1
Ethanol	-114.6	1.99

After we find molality (m), we can find the number of moles of the solute by using the formula:

$$\textbf{Number of moles (n)} = m \times \textbf{kg of solvent} \ldots\ldots\ldots\ldots \textit{Equation (iii)}$$

When we have number of moles, the usual formula from the Stoichiometry chapter of University Chemistry I allows us to calculate the molar mass of the solute since the mass of the solute (ethylene glycol in this experiment) is known from measurements during the experiment.

$$\textbf{Molar mass of solute} = \frac{\textbf{Mass of solute in grams}}{\textbf{Number of moles of the solute}} \ldots\ldots\ldots\ldots\ldots\ldots \textit{Equation (iv)}$$

In this experiment, the solute used is ethylene glycol with the molecular formula $(CH_2OH)_2$. Once you calculate the molar mass of this compound, you can easily compare your molar mass calculated from above formula to know the percentage error in this experiment.

Name _____

Experiment 1 | Molar Mass Using Freezing Point Depression

Pre-laboratory Questions

Complete this page before coming to the lab. Read the information given to answer the following questions.

Q1. Define colligative properties. How are they different from other physical properties, such as density?

Q2. What is the reason behind depression of freezing point by the addition of a non-volatile solute?

Q3. Suppose a solvent freezes at -3.4ºC. After the addition of 2.0 grams of sugar the freezing point of the mixture changed to -11.4ºC. What is the freezing point depression?

Q4. How do you calculate the molality, if you know freezing point depression and the K_f value for the given solvent?

Q5. Calculate the number of moles, *n*, of a salt if it has the molality of 1.02 *mol/kg* when dissolved in 314 grams of a suitable solvent.

***Instructor's approval*_____**

Materials Required

20 mL t-butanol, ethylene glycol, digital balance, culture tube, stirrer, computer interface, temperature sensor, stand and a clamp, 25-mL graduated cylinder, 250-mL beaker, two 400-mL beakers, ice, hot plate

Procedure

Follow the given instructions carefully and thoroughly in order to avoid starting over.

Part A: Determination of the actual freezing point of the t-butanol solvent.

1. Bring a 400-mL beaker and add about 200 mL tap water. Place the beaker on the heating plate and set the heating to medium. This is your heating bath.
2. Bring another 400-mL beaker and add about 300 mL crushed or small-cubed ice. Add cold tap water just to cover the ice. This is your ice bath.
3. Place a 250-mL beaker on the digital balance and tare it. Bring the culture tube provided and gently put it inside the 250-mL beaker. Record the mass of the culture tube only on the data sheet.
4. Now add 20 mL t-butanol into the culture tube using a graduated cylinder. Record this total mass on the data sheet.
5. Find the actual mass of the t-butanol only by subtraction.
6. Bring a temperature sensor and attach to the computer interface. It should be showing the room temperature.
7. Insert the temperature sensor into the culture tube. Also insert the stirrer into the tube so that stirrer can move freely up and down without the disturbance from the sensor.
8. Place the culture tube (with t-butanol, sensor, and stirrer in it) into the hot-water bath you prepared in step 2. Move the stirrer up and down in the culture tube to keep the temperature uniform throughout the tube.
9. As soon as the temperature reaches 40ºC, remove the culture tube from the hot water bath and place it in the cold ice-water bath you prepared in step 3. Immediately start recording the temperature every 20 seconds while constantly stirring up and down.
10. After the content solidifies, stop stirring and do not touch the temperature sensor but keep recording the temperature until at least 10 data points. If you keep stirring forcibly, the solidification process becomes faster and the temperature change does not become spontaneous, resulting into wrong freezing point measurement.
11. After completion of the recording the data points, do not throw the content of the culture tube as it will be used in part B.

Part B: Determination of the freezing point of the ethylene glycol in t-butanol (Trial 1: 1 gram of ethylene glycol)

1. Take the culture tube and the solidified content inside without removing the temperature sensor and the stirrer, from Part A.
2. Place the culture tube inside the 250-mL beaker and place the beaker on the balance. Tare it.
3. Add drops of ethylene glycol using a disposable pipet into the culture tube until the balance reads 1 gram. Note the actual grams of the solute (ethylene glycol) on the data sheet.
4. Now place the culture tube into the hot water bath. When you can, move the stirrer up and down to mix the solute with the solvent t-butanol properly.
5. When the temperature reaches 40ºC, remove the culture tube from the hot water bath and place it in the cold ice-water bath. Just as in Part A, immediately start recording the temperature every 20 seconds until you get at least 10 data points after the content solidifies and you have stopped touching the temperature sensor and the stirrer.

6. Again, after completion of the recording the data points do not throw the content of the culture tube as it will be used in part C.

Part C: Determination of the freezing point of the ethylene glycol in t-butanol (Trial 2: 2 gram of ethylene glycol)

1. Take the culture tube and the solidified content inside without removing the temperature sensor and the stirrer, from Part B.
2. Place the culture tube inside the 250-mL beaker and place the beaker on the balance. Tare it.
3. Add drops of ethylene glycol using a disposable pipet into the culture tube until the balance reads 1 gram. Note the actual grams of the solute (ethylene glycol) on the data sheet. The previous 1 gram and this 1 gram will have total 2 grams of ethylene glycol. Record the actual gram of the ethylene glycol added on the data sheet.
4. Now place the culture tube into the hot water bath. When you can, move the stirrer up and down to mix the solute with the solvent t-butanol properly.
5. When the temperature reaches 40ºC, remove the culture tube from the hot water bath and place it in the cold ice-water bath. Just as in Part A, immediately start recording the temperature every 20 seconds until you get at least 10 data points after the content solidifies and you have stopped touching the temperature sensor and the stirrer.
6. Place the culture tube in the hot water bath to melt the content of the tube.
7. Dispose the content of the culture tube in the designated waste container as directed.
8. Clean the temperature sensor, the stirrer, the culture tube using soap and water in the sink.
9. Clean and rinse the rest of the apparatus with soap and water and dry on the rack.

Date _____

Name _____

Lab Partner _____

Experiment 1 | Molar Mass Using Freezing Point Depression

Data Sheet

Write hypothesis: Simply based on your observation and the knowledge you have gained from the introduction section, write to what degree the freezing temperature of this solvent will be lowered?

_____

Part A: Cooling curve for the pure t-butanol solvent

Mass of the culture tube only _____

Mass of the culture tube and the t-butanol _____

Mass of the t-butanol by subtraction in g _____

Mass of the t-butanol in kg _____

Record the time-temperature data for every 20 seconds below. Alternately, plot the data on an Excel or Google spreadsheet directly on your computer.

S.N.	Time	Temperature
1		
2		
3		
4		
5		
6		
7		
8		
9		
10		
11		
12		
13		
14		
15		
16		
17		
18		
19		

S.N.	Time	Temperature
20		
21		
22		
23		
24		
25		
26		
27		
28		
29		
30		
31		
32		
33		
34		
35		
36		
37		
38		

S.N.	Time	Temperature
39		
40		
41		
42		
43		
44		
45		
46		
47		
48		
49		
50		
51		
52		
53		
54		
55		
56		
57		

S.N.	Time	Temperature

Part B: Cooling Curve for the 1 g ethylene glycol in t-butanol (Trial 1)

Actual mass of the ethylene glycol added in once decimal place _____

Record the time-temperature data for every 20 seconds below. Alternately, plot the data on an Excel or Google spreadsheet directly on your computer.

S.N.	Time	Temperature
1		
2		
3		
4		
5		
6		
7		
8		
9		
10		
11		
12		
13		
14		
15		
16		
17		
18		
19		

S.N.	Time	Temperature
20		
21		
22		
23		
24		
25		
26		
27		
28		
29		
30		
31		
32		
33		
34		
35		
36		
37		
38		

S.N.	Time	Temperature
39		
40		
41		
42		
43		
44		
45		
46		
47		
48		
49		
50		
51		
52		
53		
54		
55		
56		
57		

S.N.	Time	Temperature

Part C: Cooling Curve for the 2 g ethylene glycol in t-butanol (Trial 2)

Actual mass of the ethylene glycol added (one decimal place) _____

Record the time-temperature data for every 20 seconds below. Alternately, plot the data on an Excel or Google spreadsheet directly on your computer.

S.N.	Time	Temperature
1		
2		
3		
4		
5		
6		
7		
8		
9		
10		
11		
12		
13		
14		
15		
16		
17		
18		
19		

S.N.	Time	Temperature
20		
21		
22		
23		
24		
25		
26		
27		
28		
29		
30		
31		
32		
33		
34		
35		
36		
37		
38		

S.N.	Time	Temperature
39		
40		
41		
42		
43		
44		
45		
46		
47		
48		
49		
50		
51		
52		
53		
54		
55		
56		
57		

S.N.	Time	Temperature

Plotting the graphs and Calculations

For the calculation of the freezing points and the molecular mass of ethylene glycol solute used in this experiment, you should first plot the graph of the temperature vs time for all three parts, A, B, and C.

On your computer, Plot above three data into three separate graphs of appropriate style: Time on the x-axis and the Temperature on the y-axis. Get help from your instructor if you do not know how to plot graph from the given data. Choose a proper style of the graph so that it gives you the points of the curve as well as the trendline for those points. A trendline is a straight line that gives the average trend of all the points on the graph.

Since you have a vertical drop in temperature for the earlier points (before freezing) and horizontal plateau in temperature for later points (after freezing) on your graphs, there should be two trendlines which meet at the left corner. This meeting point is the actual freezing temperature you need for calculation.

Freezing point, T_{fs}, of t-butanol from the graph of Part A: _____

Freezing point of t-butanol and 1-gram ethylene glycol, T_{f1}, from the graph of Part B _____

Freezing point of t-butanol and 2-gram ethylene glycol, T_{f2}, from the graph of Part C _____

Depression of freezing point for solution 1 (Part B) $\Delta T_{f1} = T_{fs} - T_{f1}$ _____

Depression of freezing point for solution 2 (Part C) $\Delta T_{f2} = T_{fs} - T_{f2}$ _____

Now, using the formulas given in the Introduction section, first find the molality of the solute, then find the number of moles of the solute, and finally find the molar mass of the solute ethylene glycol. The molal freezing-point depression constant K_f for t-butanol is given to be $9.10\ ^oC\ m^{-1}$, a constant value.

Part B (Solution 1) calculation

Molality (*m*)

Number of moles (*n*)

Molar mass

Part C (Solution 2) Calculation

Molality

Number of moles

Molar mass

Now calculate the actual molar mass of the solute, ethylene glycol, from the molecular formula given at the end of the Introduction section of this experiment.

Actual molar mass of ethylene glycol (calculate here)

Which molar mass you calculated from above (between Trial 1 and Trial 2) is close to this actual molar mass?

Calculate below the percentage error using the trial that is close to the actual.

% Error =

(Note: Do not forget to attach the graphical curves with your lab report.)

Experiment 2 | Identify an Unknown Sugar by Boiling Point Elevation

Objective: 1. To find the experimental boiling point, T_{bi} of a pure solvent
2. To find the boiling point, T_{bf} of the solution by adding a non-volatile solute
3. To calculate the boiling point elevation, ΔT_b for the solute-solvent system
4. To calculate the molar mass of the unknown sugar using the ΔT_b

Introduction

In Experiment 1 you studied one of the **Colligative properties,** the depression of freezing point. You measured the difference in freezing point of the solution and the pure solvent to find out the molecular mass of the given solute, ethylene glycol. In this experiment, you will use same theoretical principle, but instead of freezing temperature you will measure the boiling temperature of a different solvent and solute combination. When it goes to boiling from freezing, you need to consider different experimental aspects to identify the sugar by first finding the molecular mass and comparing it with the known molecular mass of the selected sugars.

Boiling point elevation is represented by ΔT_b and is mathematically given by the following equation

$$\textit{Elevation of boiling point, } \Delta T_b = T_{bf} - T_{bi} \quad \ldots\ldots\ldots\ldots \textit{Equation (i)}$$

Where, T_{bf} = the boiling point of the solute-solvent system
T_{bi} = the boiling point of the pure solvent

Since the final boiling temperature of a solute-solvent system is always higher than the initial freezing temperature, ΔT_b is a positive value. Remember the word "elevation' meaning lifting, which refers that if a solute is added, the boiling point gets elevated higher than the pure solvent's boiling point.

The elevation of boiling point is related to the molality, m of the solution as given in the following equation

$$\textit{Molality, } m = \frac{\Delta T_b}{K_b} \ldots\ldots\ldots\ldots\ldots\ldots \textit{Equation (ii)}$$

Where, K_b is the molal boiling point elevation constant. This constant is unique to a particular solvent and this constant value is given in the following table for some common solvents. Also given in the table are actual freezing points for the pure solvents at 1 atm. pressure.

Table 2.1: Actual boiling points and the boiling point constants of some common solvents

Solvent	Actual boiling point (°C), T_{bi}	K_b (°C . kg/mol)
Water	100.0	0.513
Carbon tetrachloride	76.8	5.26
d-(+)-Camphor	207.4	4.91
Acetic acid	118.1	3.22
Benzene	80.1	2.64
Cyclohexane	80.7	2.92
Naphthalene	217.9	5.8
Carbon disulfide	46.2	2.42
Ethanol	78.4	1.23

The molality (m) of a solution is related to the number of moles of solute by using the following formula:

$$\textbf{Number of moles (n)} = \textbf{m} \times \textbf{kg of solvent} \ldots\ldots\ldots\ldots \textit{Equation (iii)}$$

The number of moles, n, in turn can be used to find the molar mass of the solute used in the solution by the stoichiometry formula which we used in the previous experiment.

$$\textbf{Molar mass of solute} = \frac{\textbf{Mass of solute in grams}}{\textbf{Number of moles of the solute}} \ldots\ldots\ldots\ldots\ldots\ldots \textit{Equation (iv)}$$

Once you calculate the molar mass of the solute, use the following table of molecular masses for given sugars. Find the matching molecular mass to identify the sugar.

Table 2.2: Molecular formula and molecular mass of some common sugars

Sugar	Molecular formula	Molecular mass
Ribose	$C_5H_{10}O_5$	150.13 g/mol
Glucose	$C_6H_{12}O_6$	180.15 g/mol
Sucrose	$C_{12}H_{22}O_{11}$	342.30 g/mol
Starch	$C_{12}H_{25}NO_{11}$	359.33 g/mol

Name _____

Experiment 2 | Identify an Unknown Sugar by Boiling Point Elevation

Pre-laboratory Questions

Complete this page before coming to the lab. Read the information given to answer the following questions.

Q1. Define boiling point elevation.

Q2. What causes the boiling point to elevate when we add a non-volatile solute? (This is a theoretical question.)

Q3. A sugar's formula is $C_6H_{12}O_6$. Calculate the molality of a sugar solution if 35.0 g of it is dissolved in 760 grams of water?

Q4. Calculate the molality of a solution of sugar in acetic acid if the boiling point of the solution increased to 119.2°C. Use the actual boiling point and the K_b value form Table 2.1

Q5. If the molecular mass found by the experiment of a dissolved sugar turns out to be 177.4 g/mol, what sugar could it be? Why?

***Instructor's approval*_____**

Materials Required

250-mL Erlenmeyer flask, 100-mL graduated cylinder, heat plate, DI water, temperature probe, computer interface, ice-bath, stirring rod, provided sugar,

Procedure

Part A: Determination of the actual boiling point of pure DI water

1. Bring a 250-mL Erlenmeyer flask. Measure its mass and record on your data sheet.
2. Add 100 mL DI water using a graduated cylinder. Record the combined mass.
3. Subtract the mass of the flask to get the mass of DI water. Convert to kg.
4. Bring the temperature probe and a computer interface, Connect the probe to the interface.
5. Insert the probe into the flask. Start heating the DI water on a hot plate on medium heat. Start the timer and measure the temperature every 20 seconds. Record on the data page.
6. Keep recording the temperature even after it does not significantly increase for 10 more data points.
7. After finishing, keep the flask inside an ice-bath until it cools down to room temperature. You can keep the temperature probe inside the flask for checking the temperature.
8. When the flask cools down, pour all the water from the flask into the 100-mL graduated cylinder to check if you lost some water by evaporation. If you did, fill it up back to 100-mL mark and place the water back in the flask for Part B.

Part B: Determination of the boiling point of DI water-sugar solution (Trial 1: 20-gram sugar)

1. While the flask is cooling down, measure 20.0 g of provided sugar on a weigh boat. Record actual mass.
2. Take the flask out of the ice-bath once it reaches the room temperature.
3. Add the sugar into the flask and mix well with a stirring rod.
4. Place the flask now on the heating plate. Start the timer and record the temperature every 20 seconds. Keep recording the temperature after it stabilizes at least 10 more data points.
5. Replace the ice in the ice-bath and place the flask in the bath to cool it down to the room temperature.

Part C: Determination of the boiling point of DI water-sugar solution (Trial 2: 40-gram sugar)

1. Measure 20.0 g of sugar and add to the flask once it reaches the room temperature. Total grams of sugar in the flask is now 4 grams. Record actual mass.
2. Stir well and start heating and recording the temperature after every 20 seconds as in Part B.

For clean-up, everything in this lab can go down the drain. Wash all the apparatus with soap and dry on the rack.

Date _____

Name _____

Lab Partner _____

Experiment 2 | Identify an Unknown Sugar by Boiling Point Elevation

Data Sheet

Write hypothesis: To what degree would the dissolution of sugar elevate the boiling point of water?

_____

Part A: Heating Curve for pure DI water

Mass of the Erlenmeyer flask only _____

Mass of the flask and the DI water _____

Mass of DI water _____

Mass of DI water in kg _____

Record the time-temperature data for every 20 seconds below. Alternately, plot the data on an Excel or Google spreadsheet directly on your computer.

S.N.	Time	Temperature
1		
2		
3		
4		
5		
6		
7		
8		
9		
10		
11		
12		
13		
14		
15		
16		
17		
18		
19		

S.N.	Time	Temperature
20		
21		
22		
23		
24		
25		
26		
27		
28		
29		
30		
31		
32		
33		
34		
35		
36		
37		
38		

Part B: Heating Curve for the 20 g sugar in DI water (Trial 1)

Actual mass of the sugar added in this flask (once decimal place _____

Record the time-temperature data for every 20 seconds below. Alternately, plot the data on an Excel or Google spreadsheet directly on your computer.

S.N.	Time	Temperature
1		
2		
3		
4		
5		
6		
7		
8		
9		
10		
11		
12		
13		
14		
15		
16		
17		
18		
19		

S.N.	Time	Temperature
20		
21		
22		
23		
24		
25		
26		
27		
28		
29		
30		
31		
32		
33		
34		
35		
36		
37		
38		

Part C: Heating Curve for the 40 g sugar in DI water (Trial 2)

Actual mass of the sugar added for this trial (one decimal place) _____

Record the time-temperature data for every 20 seconds below. Alternately, plot the data on an Excel or Google spreadsheet directly on your computer.

S.N.	Time	Temperature
1		
2		
3		
4		
5		
6		
7		
8		
9		
10		
11		
12		
13		

S.N.	Time	Temperature
20		
21		
22		
23		
24		
25		
26		
27		
28		
29		
30		
31		
32		

14		
15		
16		
17		
18		
19		

33		
34		
35		
36		
37		
38		

Plotting the Graphs and Calculations

Plot the graph of the above data, *Time* along x-axis and *Temperature* along y-axis on a spreadsheet choosing appropriate style. Get help from your instructor if you do not know how to plot graph from the given data. Choose a proper style of the graph so that it gives you the points of the curve as well as the trendline for those points.

The meeting point of the two trendlines in a single curve is the actual boiling point for that Trial.

Boiling point, T_{bi}, of DI water from the graph of Part A _____

Boiling point, T_{bf1}, of DI water and 2-gram sugar from the graph of Part B _____

Boiling point, T_{bf2}, of DI water and 4-gram sugar from the graph of Part C _____

Elevation of boiling point for solution 1 (Part B) $\Delta T_{b1} = T_{bf1} - T_{bi}$ _____

Depression of freezing point for solution 2 (Part C) $\Delta T_{b2} = T_{bf2} - T_{bi}$ _____

Now, using the formulas given in the Introduction section, first find the molality of the solute, then find the number of moles of the solute, and finally find the molar mass. Use K_b from Table 2.1 of constants.

<u>Part B (Solution 1) calculation</u>

Molality (m)

Number of moles (n)

Molar mass

Part C (Solution 2) Calculation

Molality

Number of moles

Molar mass

Compare the molar masses you calculated above with the molar masses of the sugars given on Table 2.2. Identify the unknown sugar based on the molar masses you calculated.

The unknown sugar provided in this experiment is _____

(Note: Do not forget to attach the graphical curves with your lab report.)

Experiment 3 | Factors that Affect the Reaction Kinetics

Objective: 1. To observe various physical and chemical phenomena and record the effect of the suggested variables
2. To list the factors and their effect on the reaction kinetics

Introduction

Kinetics is the study of rates. How fast something happens is represented by its kinetics. **Chemical kinetics** is that branch of kinetics which studies the rate of chemical processes. With the help of chemical kinetics, we can precisely measure how fast a chemical reaction occurred which is defined by a term called reaction rates. You will calculate the reaction rate of one sample reaction in the next chapter. In this chapter, we will qualitatively study the reaction rates by bringing various physical or chemical changes to the provided reaction systems. This lab is divided into several section to study factors that affect the reaction rates. Each section will give an insight into the molecular level impact of the cause of interest to a chemical (or physical) process

Part A: Surface Area

This factor for a rate of reaction is more of a "contact" concern. The molecules reacting together must encounter each other for them to interact, exchange electrons, break or make bonds, twist and turn, and finally give a new product. The more in contact the molecules are the more they can perform these activities and the faster the reaction rate is. Increasing surface area gives the ability for atoms or molecules to come in contact with larger number of other atoms or molecules.

Figure 3.1 shows how we can increase surface area of solid chemicals so that while they react with another chemical in solution form, more of their area is in contact with the solution. On the left, is a cube having one side 1 cm long, the surface area is 6 cm^2. If we cut this cube into 8 cubes of equal size, the surface area simply doubles without having to add any new surface or new material. The surface are again doubles if we cut each one of these 8 cubes into 8 more cubes.

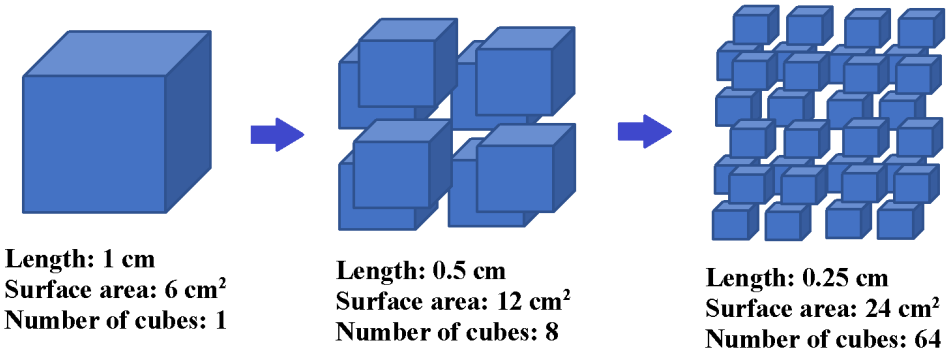

Figure 3.1: Surface area comparison of the same cube when cut into different number of cubes

Thus, crushing a solid chemical into powder form significantly increases the surface area and increases the possibility of contact between reacting molecules. Bulk material has inner molecules that are inaccessible to reagent molecules while fragmented materials have those hidden surfaces now exposed for chemical attach and the reaction takes less time to complete.

Part B: Temperature

Kinetic Theory supports that higher is the kinetic energy of the interacting molecules higher will be the chance of collision because their energy level will be raised as they overcome the activation energy faster. According to this theory, when temperature increases the kinetic energy also increases and the molecular vibration, motion, and reorientation all increased per unit time. This helps in increasing reaction rate.

Collision Theory supports that for a chemical reaction to occur, the molecules must collide with sufficient energy. This theory further implies that there are several collisions that do not have enough energy to cause a reaction and only the collisions that occur with sufficient energy result into complete reactions. The higher is the number of successful collisions, the faster will be the reaction complete.

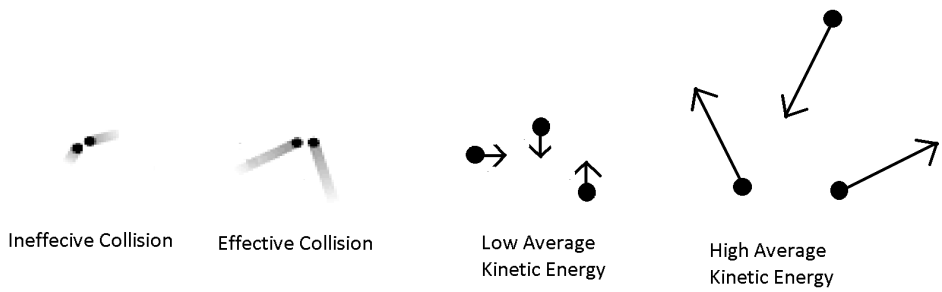

Figure 3.2: Ineffective versus effective collisions and low versus high kinetic energy molecules.

The illustration above in Figure 3.2 explains how low energy collisions are ineffective and with enough energy available the collision become effective and the average kinetic energy of the molecules also increases.

In general, temperature increases the rate of chemical reactions by lowering the activation energy barrier for molecules. But some reactions which are not favored by heat, go to backward direction when temperature is increased.

Part C: Concentration

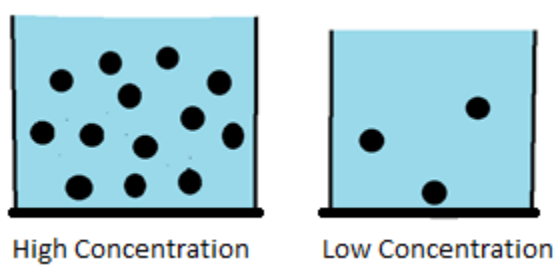

Figure 3.3: High-concentration solution is like a crowded swimming pool.

As shown in Figure 3.3 above, a concentrated solution can be compared to a crowded swimming pool, the persons representing the molecules. The chance of people touching each other (collision) is high in a crowded swimming pool than in a less crowded one. A highly concentrated solution provides opportunity for the molecules to collide more often and more effectively to give the desired product faster.

If there are relatively low number of molecules in a solution then the number of effective collisions will be less, and the reaction becomes slow. A diluted solution has less reagent molecules per unit volume.

Part D: Catalyst

Catalyst is a chemical species that increases the rate of chemical reaction without itself taking part in the actual reaction. A catalyst does not alter the way the reaction occurs but lowers the activation energy required to break and make the bonds to get to the product from the reactants. As you see in the following Figure 3.4, the uncatalyzed pathway for the reaction is having to overcome a higher activation energy curve but the catalyzed pathway for the same reaction is needing to overcome a lower amount of activation energy. The reaction rate, therefore, is higher for a catalyzed reaction.

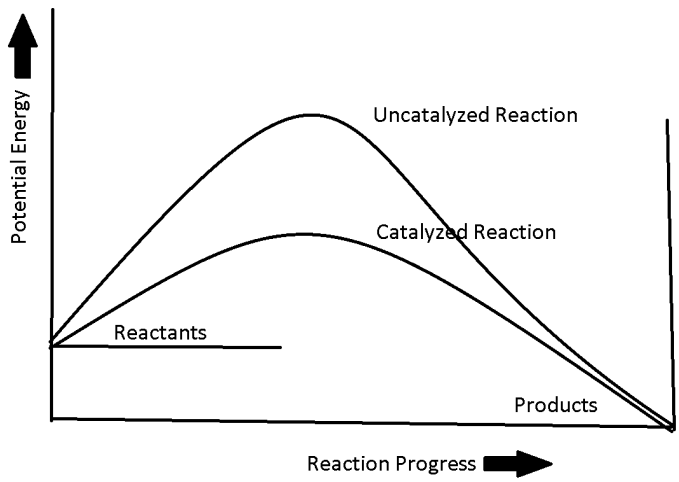

Figure 3.4: An uncatalyzed reaction pathway versus catalyzed pathway

In general, reactions with catalysts make important reaction intermediates which are the chemical compounds temporarily made to assist the reactant to convert into product. These intermediates help in properly orienting the reagents and in smooth transfer of molecules between phases or reaction media. Formation of intermediates is the main reason for lowering the activation energy since the product is made faster with the less expenditure of energy.

Part E: Orientation

Orientation of reacting species also plays an important role in directing a reaction to product formation. Not all collisions are productive, meaning there are several collisions between two reacting molecules which do not result into the product, but they just collide. But if they collide with proper orientation, they give the desired product.

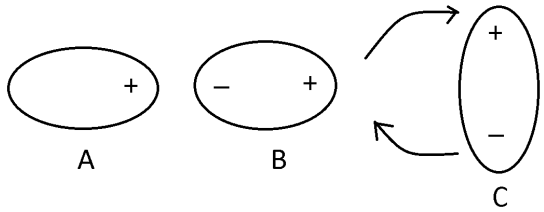

Figure 3.5: Proper orientation plays a productive role in creating a desired product.

As seen in Figure 3.5 above, the interaction between A and B is productive since they are properly oriented with their opposite poles facing each other. The interaction between B and C as such will not be productive unless they reorient themselves to align the opposite charges.

Name _____

Experiment 3 | Factors that Affect the Reaction Kinetics

Pre-laboratory Questions

Complete this page before coming to the lab. Read the information given to answer the following questions.

Q1. How does surface area affect reaction kinetics?

Q2. What is the difference between kinetic theory and collision theory for temperature effect on rate of reaction?

Q3. How is it possible for a catalyst to lower the activation energy?

Q4. What is the relation between contact and concentration?

Q5. Why does water not dissolve wax? Explain based on orientation.

***Instructor's approval*_____**

Materials Required

Part A: 1. Weigh boat or paper, coffee creamer powder, a scoop, Bunsen burner
2. Two 150-mL beakers, 25-mL graduated cylinder, marble chips, mortar and pestle, 2M HCl
Part B: 1. Heating plate, two 400-mL beakers, food coloring, ice-cold water from the fridge
2. Heating plate, test tube (medium-size), 10-mL graduated cylinder, 0.1M HCl, steel wool
Part C: Two test tubes (medium-size), 10-mL graduated cylinder, two iron nails, 0.1M HCl, 2M HCl
Part D: Heating plate, two test tubes (medium-size), 10-mL graduated cylinder, H_2O_2 solution, KI solution, MnO_2 powder
Part E: two plain Styrofoam balls without Velcro, two Styrofoam balls with two Velcro squares (linear orientation) on them, two Styrofoam balls with four Velcro squares attached, a plastic trough

Procedure

Part A: Surface Area

Experiment 1: Coffee Creamer

1. Obtain a scoop and a Bunsen burner. Fix the burner to the gas tap. Check for any cracks on the rubber tubing.
2. Bring some of the provided coffee creamer to the table on a weigh boat. Scoop some of the coffee creamer at the tip of the scoop. Make sure that the tip of the scoop is full of the creamer (just the tip, not the whole scoop).
3. Once the tip is full of the creamer and the burner is lit, bring the tip of the scoop close to the burner flame so that you can blow the creamer to the flame and the blown away and burnt creamer drops into the sink. This makes the clean-up easy otherwise the table will be messy.
4. Once ready, blow the creamer to the flame. Record your observation on how the creamer burns in the flame.
5. Now take about the same amount of creamer on the tip of the scoop as in Step 2 above. This time do not blow the creamer to the flame but bring the tip into the flame. Record the observation on how the creamer burns in the flame.
6. Explain what caused the first observation versus the second observation.
7. Clean up if needed or proceed to the next experiment.

Experiment 2: Marble Chips

1. Obtain the provided marble chips and weight out two portions of the chips, 2.0 grams on a weight boat (or weigh paper) each.
2. Leave one portion as it is but grind the other portion in a clean and dry mortar into powder with a pestle.
3. Bring two 150 mL clean beakers and pour out 18 mL of 2M HCl into each.
4. Once your timer is ready, pour the chips into one beaker and all the powder into another. Immediately start the timer.
5. Record the time for the powder to react as well as the chips to react completely and disappear into the solution.
6. Explain what caused the difference in time you observed on the data page.
7. Dispose of the content of the beakers in the designated container and clean-up if needed or proceed to the next experiment.

Part B: Temperature

Experiment 1: Food Coloring

1. Bring two 400-mL beakers. Fill one with 400 mL tap water and set it for heating on high heat.
2. Into the other beaker, add 400 mL ice-cold water from the fridge. Add a drop of food coloring into the ice-cold water onto the surface. Record the observation.
3. When the water in the first beaker goes to nearly boil, turn off the heat and add a drop of food coloring onto the surface. Record the observation.
4. Briefly explain the observation on the data page.
5. Throw the content used in this experiment into the sink and clean-up. You will need the hot plate for the next experiment.

Experiment 2: Steel Wool

1. Bring a test tube and place about 4 mL 0.1M HCl provided using a graduated cylinder.
2. Make a small ball, that should fit into the test tube, out of the provided steel wool.
3. Place the steel wool ball into the test tube and record the observation.
4. Now heat the test tube using the hot plate. Do not let the content boil or splash. After the test tube is hot enough, observe the rate of bubbles produced in the reaction and record your observation.
5. Explain your observation on the data page

Part C: Concentration

1. Bring two test tubes and 4 mL of 0.1M HCl into one while 2M HCl into the other. Label which test tube has what.
2. Bring two iron nails of the same size and place one into each test tube.
3. Observe the rate of reaction and record your observation.
4. After the observation is complete, pour out the acid into the designated container and wash out the nail and dry on a paper towel.
5. Clean and dry the test tubes.

Part D: Catalyst

1. Bring two test tubes and 4 mL H_2O_2 solution into each.
2. In the first test tube, add a drop of KI solution. Record the observation.
3. In the second test tube, add a pinch of MnO_2. Record your observation.
4. Heat the first test tube by putting on the hot plate. Record your observation.
5. After the observation is complete, pour out the reaction mixture into the designated container. Clean and dry the test tubes on the test-tube racks.

Part E: Orientation

1. Bring two plain Styrofoam balls without Velcro on them (no orientation), two balls with two Velcro squares (linear orientation) and two balls with four Velcro squares attached onto their surface.
2. Bring a trough big enough to keep the balls inside while moving in a swirling motion.

3. First put the two plain balls in the trough. Move the trough in a swirling motion as well as other random motions so that the balls keep moving inside it all the time. Record your observation.
4. Then put the two balls with two Velcro on them in the trough. Move the trough again in a swirling motion as well as other random motions. Record your observation.
5. Now put the two balls with four Velcro on them in the trough and move the trough as above. Record your observation.

You might have touched the concentrated acids. Wash your hands thoroughly after clean-up before leaving.

Date _____

Name _____

Lab Partner _____

Experiment 3 | Factors that Affect the Reaction Kinetics

Data Sheet

Part A: Surface Area

Experiment 1: Coffee Creamer

Write hypothesis 1: Which creamer between the blown and the unblown, will burn more effectively?

_____

Observation for the blown coffee creamer _____

Observation for the non-blown coffee creamer _____

Explanation for the observation _____

_____

Experiment 2: Marble Chips

Write hypothesis 2: Which marble chips between the powdered and the chunks, will react faster?

_____

Time required for the powdered marble chips to react completely _____

Time required for the chunks marble chips to react completely _____

Explanation for the observation _____

_____

Part B: Temperature

Experiment 1: Food Coloring

Write hypothesis 1: Which water between the cold and the hot, will spread the food color faster?

_____

Observation for the ice-cold water _____

Observation for the nearly boiled water _____

Explanation for the observation _____

_____

Experiment 2: Steel wool

Write hypothesis 2: Which acid, hot or cold, will have faster rate of reaction?

_____

Observation of the reaction between HCl and steel wool in cold _____

Observation for the reaction between HCl and steel wool in hot _____

Explanation for the observation _____

_____

Part C: Concentration

Write hypothesis: Which concentration, low or high, will have the higher rate of reaction?

_____

Observation for the 0.1M HCl solution _____

Observation for the 2M HCl solution _____

Explanation for the observation _____

_____

Part D: Catalyst

Write hypothesis: Which catalyst will have the higher rate of reaction?

_____

Observation for the H_2O_2 and KI solution _____

Observation for the H_2O_2 and MnO_2 solution _____

Observation for the H_2O_2 and KI solution (when heated) _____

Which catalyst is a better catalyst? _____

Was heated KI reaction better than cold MnO_2 reaction? _____

Explain your observation _____

Part E: Orientation

Write hypothesis: Which balls will stick with each other the fastest?

_____

Observation for the plain balls _____

Observation for the balls with two Velcro _____

Observation for the balls with four Velcro_____

Which balls stuck with each other the fastest? _____

What is the role of orientation in the reaction between two molecules? _____

_____

_____

Experiment 4 | Rate Constant for Iodination of Acetone

Objectives:
1. To carry out iodination of acetone with different reactant concentrations to find the effect of changing the concentration and the reaction time
2. To find out the initial concentration of iodine in the reaction mixture to calculate the initial rate
3. To establish the rate equation by finding the orders of reaction with respect to the reactants using the initial rates
4. To calculate the rate constant k and compare the predicted rate and the experimental rate.

Introduction

Iodination of acetone is a common reaction studied for kinetics purpose because of the advantage of this reaction being simple to perform and iodine itself being colorful to show the completion of reaction by its color change. The reaction between iodine and acetone occurs in the acidic medium as follows:

$$\underset{\text{(acetone)}}{CH_3COCH_3\,(aq)} + \underset{\text{(iodine)}}{I_2\,(aq)} + \underset{\text{(HCl)}}{H^+(aq)} \rightarrow \underset{\text{(iodinated acetone)}}{CH_3COCH_2I\,(aq)} + \underset{\text{(iodide ion)}}{I^-\,(aq)} + H^+(aq)$$

Brown color *Colorless*

The rate law for this reaction is given by the following equation:

$$\textbf{Rate} = \boldsymbol{k}\ \textbf{[Acetone]}^x\ \textbf{[Iodine]}^y\ \textbf{[H}^+\textbf{]}^z$$

So, to find out the rate of this reaction, we need to first find several components of this equation: the concentration of acetone, the acid, and the iodine; the values of x, y, and z; and the value of *k*, the rate constant for this equation. This is possible by carrying out several reactions between iodine and acetone in acidic medium altering the acetone concentration, iodine concentration, and the acid concentration and measuring the time required for each of these reactions. This process is called the method of Initial Rates, where the initial concentration of the reactants are measured as a function of time and these are tabulated to see how the concentration change will affect the time of reaction.

For iodination of acetone, however, we do not need to make every component of the reaction variable as a function of time. We can keep the concentration of the acetone and the acid relatively high so that the limiting reagent is iodine. There are two-fold benefit to this modification:

1. Iodine being the controlling chemical, its color change can be monitored for the completion of the reaction. Iodine solution is brown while the iodide ion on the product side is colorless. The solution turning from brown to colorless is the indication of the end of reaction.
2. The initial rate can be made equal to the average rate of the reaction, which is possible by finding only the iodine concentration change over the time (duration of the reaction) measured. This is expressed in the following equation:

$$\textbf{\textit{Average Rate}} = \textbf{\textit{Initial Rate}} = \frac{-([I_2]_{final} - [I_2]_o)}{\Delta t}$$

In the above equation, the concentration of the iodine at the end of reaction is the final iodine concentration, $[I_2]_{final} = 0$, which is used up (as denoted by color change). We can find out the initial concentration of iodine, $[I_2]_o$ in the solution by simply using the dilution equation:

$$M_1V_1 = M_2V_2$$

M_1 is the molarity of the iodine solution provided for the reaction.
V_1 is the volume of iodine solution used in that reaction or a particular trial.
M_2 is the initial concentration of the iodine = $[I_2]_o$
V_2 is the total volume of the solution used in the reaction mixture.

Even though the acid used in the reaction is a catalyst, we will study its effect in the reaction rates. Therefore, we need to make changes in the acid concentration as well in some of the trials so that we can see how its concentration change will affect the overall rate. The $[H^+]^z$ component is included in the reaction rate for this reason.

The x, y, z components of the rate equation give the orders of each reactant and x + y + z will give the overall order of the iodination of acetone. These exponents, x, y, and z are found by using the same rate equation but keeping the two other reactants constant. This means, if we need to find x, the exponent for acetone, we will keep the iodine and the acid concentration for those trials constant so that the only variable is the rate based on the acetone concentration as the other two have no impact on the reaction rate. Similarly, to find y, the exponent for iodine, the acetone and the acid concentration will be kept constant.

Name _____

Experiment 4 | Rate Constant for Iodination of Acetone

Pre-laboratory Questions

Complete this page before coming to the lab. Read the information given to answer the following questions.

Q1. What is the formula for the iodized acetone compound? What other chemicals help this reaction?

Q2. Why is it possible to keep the iodine limiting in this reaction and still calculate the rate of reaction accurately?

Q3. Why would be the final concentration of iodine zero in the reaction? How does it help to carry out the reaction process?

Q4. What is the initial rate of the reaction if the initial iodine concentration is 0.0012M and the time taken for the reaction to complete is 312 seconds?

Q5. Using the following table for the initial concentration of the given chemicals and the initial rates, calculate the order of reaction with respect to acetone.

Trial	$[Acetone]_{initial}$ M	$[Iodine]_{initial}$ M	Initial rates M/s
1	0.10	0.10	1.23×10^{-3}
2	0.10	0.20	2.46×10^{-3}
3	0.20	0.10	4.92×10^{-3}

***Instructor's approval*_____**

Materials and Chemicals

Three 150-mL beakers, four 50-mL graduated cylinders, two 125-mL Erlenmeyer flasks, 4.0 M acetone, 1M HCl, 0.002M Iodine, DI water, four disposable pipets.

Procedure

Part A: Preparation of Reaction Components

1. Bring three 150-mL beakers and four 50-mL graduated cylinders. All apparatus should be clean and dry.
2. Label the first beaker and the graduated cylinder both as *A* for Acetone. These will be used for acetone only.
3. Label the second beaker and the graduated cylinder as *H* for HCl. These will be used for HCl only.
4. Do not label a beaker for water. You should bring a squirt bottle of DI water instead. Label the third graduated cylinder as *W* for water. This cylinder should be used for DI water only.
5. Label the remaining beaker and the 4th graduated cylinder as *I* for iodine. These will be used for iodine only.
6. Now, bring two clean and dry 125-mL Erlenmeyer flasks. Place 25 mL DI water into one of them using the graduated cylinder labeled *W*. Mark this flask as *Blank*.
7. The second 125-mL Erlenmeyer flask is your reaction flask. Label this flask as *Reaction*. This flask will be used for the reactions in Part B.
8. Place a white paper towel under both the flasks to distinguish the color precisely.
9. Using the graduated cylinder labelled *A*, bring about 50 mL of acetone from the provided stock bottle, and pour it into the beaker labelled *A*.
10. Using the graduated cylinder labelled *H*, bring about 50 mL of provided 1M HCl solution and pour it into the beaker labelled *H*.
11. Using the graduated cylinder labelled *I*, bring about 50 mL of provided 0.002M iodine solution and pour it into the beaker labelled *I*.
12. Your reaction solutions are ready. Have a timer ready. Now you are ready for Part B.

Part B: Carrying out the Reactions

1. Follow the given table below as a direction to how much each solution/component from above beakers you will need to create the reaction mixture needed

Reaction Trial	4M Acetone	1M HCl	DI Water	0.002M Iodine	Time (s)
1 A	5 mL	5 mL	10 mL	5 mL	
1 B	5 mL	5 mL	10 mL	5 mL	
2 A	10 mL	5 mL	5 mL	5 mL	
2 B	10 mL	5 mL	5 mL	5 mL	
3 A	5 mL	5 mL	5 mL	10 mL	
3 B	5 mL	5 mL	5 mL	10 mL	
4A	5 mL	10 mL	5 mL	5 mL	
4B	5 mL	10 mL	5 mL	5 mL	

2. To carry out Trial 1A, use the CORRECT graduated cylinders and measure out the chemicals according to Row 1A of the above table .

3. Place the acetone, the HCl, and the water into the *Reaction* Erlenmeyer flask. When ready with the timer, place the iodine solution and start the timer. Constantly swirl the flask and constantly compare the color of the content against the *Blank*. Once the color of the reaction mixture becomes the same as the *Blank*, immediately stop the timer and note the time on the data sheet.
4. Discard the content of the *Reaction* flask into a designated container and wash it with water and dry it with a paper towel properly.
5. Once the flask is ready for Trial 1B, measure out the chemicals and perform the experiments similarly as above (Steps 2 and 3) and using the volumes as given on the above table Row 2. Do not forget to immediately start the timer after you pour the iodine. Note the time for completion of the reaction by tallying with the *Blank*.
6. Similarly perform the remaining trials with different chemical volumes according to the table above and recording the times properly for the reaction to complete
7. Precise measurement of time is important in this experiment since this is the kinetics reaction. If you think that the time has not been measured properly or a particular trial was not done properly, repeat that trial correctly.

Dispose of acetone-related chemicals in the designated container. Clean up your station. Wash all the apparatus and put to dry properly.

Date _____

Name _____ Lab Partner _____

Experiment 4 | Rate Constant for Iodination of Acetone

Data Sheet

Time required for the reaction to complete in Trial 1A _____

Time required for the reaction to complete in Trial 1B _____

Average time for Trial 1, Δt_1 _____

Time required for the reaction to complete in Trial 2A _____

Time required for the reaction to complete in Trial 2B _____

Average time for Trial 2, Δt_2 _____

Time required for the reaction to complete in Trial 3A _____

Time required for the reaction to complete in Trial 3B _____

Average time for Trial 3, Δt_3 _____

Time required for the reaction to complete in Trial 4A _____

Time required for the reaction to complete in Trial 4B _____

Average time for Trial 4, Δt_4 _____

Calculation for initial concentrations of Acetone, $[\text{Acetone}]_o$, $[\text{HCl}]_o$, and Iodine, $[I_2]_o$.

For all three trials, use the equation $M_1V_1 = M_2V_2$ for the calculation of acetone and iodine initial concentrations. Remember the following:
M_1 is the given concentration of the chemical, 4M for acetone and 0.00118M for iodine.
V_1 is the volume you took of that chemical in that trial. Find this volume from the table in the Procedure section.
M_2 is the initial concentration of the chemical for each trial which you need to calculate.
V_2 is the final volume of the solution in the reaction mixture which is always 50 mL in all trials.

Calculate here for Trial 1

$[\text{Acetone}]_o$

$[I_2]_o$

$[HCl]_o$

Calculate here for Trial 2

$[Acetone]_o$

$[I_2]_o$

$[HCl]_o$

Calculate here for Trial 3

$[Acetone]_o$

$[I_2]_o$

$[HCl]_o$

Calculate here for Trial 4

$[Acetone]_o$

$[I_2]_o$

$[HCl]_o$

Now, calculate the initial rate for each trial using the following equation. We just use iodine concentration since this is the limiting reagent. Acetone and HCl are both excess in all reactions.

$$Initial\ Rate \quad = \frac{-([I_2]_{final} - [I_2]_o)}{\Delta t}$$

$[I_2]_{final}$ for all trials is zero since there is no iodine concentration at the end of the reaction. And average Δt were found in each trial above, Δt_1, Δt_2, and Δt_3 respectively.

Trial 1 Initial Rate =

Trial 2 Initial Rate =

Trial 3 Initial Rate =

Trial 4 Initial Rate =

Complete the following table using the above calculated values for the initial concentrations of acetone, iodine, HCl, and the initial rates for each trial.

Trial	**$[Acetone]_o$**	**$[Iodine]_o$**	**$[HCl]_o$**	**Initial Rate**
1				
2				
3				
4				

Calculation for the orders of each reactant

Using the above table, find the values of x, y, and z in the rate law equation for iodination of acetone.

$$\textbf{Rate} = \boldsymbol{k}\ [\textbf{Acetone}]^{x}\ [\textbf{Iodine}]^{y}\ [\textbf{H}^{+}]^{z}$$

Use trials 1 and 2 to find x, the order for acetone, since acetone concentration is doubled from 1 to 2.

Calculated value of x _____

Rounded value of x, round to a whole number _____

Use trials 1 and 3 to find y, the order for iodine, since iodine concentration is doubled from 1 to 3.

Calculated value of y = _____

Rounded value of y, round to a whole number _____

Use trials 1 and 4 to find z, the order for HCl, since H^+ concentration is doubled from 1 to 4.

Calculated value of z _____

Rounded value of z, round to a whole number _____

Calculation for *k*, the rate constant

Using above values of x, y, and z and the concentrations of each reactant as well as the rates for each trial, we can calculate *k* using

$$\textbf{Rate} = \boldsymbol{k}\ [\textbf{Acetone}]^{x}\ [\textbf{Iodine}]^{y}\ [\textbf{H}^{+}]^{z}$$

Calculate *k* for trial 1 and 2
Trial 1

Trial 2

Are the values close? _____ **Average value of *k*** _____

<u>Difference between the predicted reaction rate and the experimental rate</u>

Now, predict the rate for trial 4 and compare the predicted rate (i.e. theoretically possible rate) with the experimental initial rate for trial 4. For this use the value of the average rate constant, *k* calculated above.

Calculate the rate for trial 4 here (Predicted) =

Is the predicted rate close the experimental rate? _____

Experiment 5 | Le Châtelier's Principle: Shift of Equilibrium

Objective: 1. To observe the change in equilibrium brought about by the addition of a chemical, temperature change, and pH change by first establishing the equilibrium
2. To know the direction of equilibrium shift
3. To identify the change in concentration of certain ions due to equilibrium shift
4. To explain the shift based on Le Châtelier's principle.

Introduction

Systems at **equilibrium** are unique systems which seem static macroscopically but are dynamic microscopically. In equilibrium systems, the rate of forward reaction is equal to the rate of backward reaction so that neither the products are significantly formed from the reactants nor the reactants are significantly formed from the product. There is a subtle balance between the reactant concentration and the product concentration in the equilibrium state. However, the forward reaction is constantly occurring to give some products as well as the backward reaction is also continuously occurring to give some reactants back. As soon as some products are formed, the subtle balance is disrupted because there are too many products, and the products start to form the reactants. As soon as little too many reactants are formed, a disruption is created and those reactants start to form the products.

Ice ⇌ water at 0 ^{o}C and 1 atm.

We can call these disruptions or forces that cause the equilibrium system to be strained as **"stress"**. A stress could be physical or chemical depending on the system itself. Water under a frozen lake is a good example of system at equilibrium. The temperature is around 0°C and the atmospheric pressure is at 1 atm at the boundary between the ice and the water. Some ice in this system is forming water while some water is changing back to ice. Introducing some heat in this system will act as a "stress". If the temperature remains at 0°C and the atmospheric pressure remains at 1 atm, this stress will cause some of ice to melt. This causes some of water to freeze back so that the equilibrium is maintained. Stirring the water swiftly at the boundary is another example of stress which will cause some water to freeze and as a result some ice to melt back to water.

Henri-Louis Le Châtelier introduced the idea of an equilibrium system responding itself in order to minimize the effect of applied stress. **According to Le Châtelier's Principle: when a stress is applied to a system at equilibrium, the system will respond by shifting in the direction that minimizes the effect of the stress to reestablish the equilibrium.**

A chemical equilibrium basically refers to the equilibrium of a chemical reaction. "Shifting right" means the reactant-side chemicals will be consumed to change into products while "shifting left" means the product-side chemicals will be consumed to give reactants.

Below we discuss some stresses that cause the shift in equilibrium in a chemical reaction. Some of these factors will be experimented on this lab while others are here for discussion only.

1. Concentration Change

Change in concentration in a system can be carried out by one of the following ways:
-Adding a reactant
-Adding a product

-Removing a reactant
-Removing a product
-Adding a different chemical that has a common ion
Adding a reactant will stress the system on the reactant side. To relieve that stress some reactant must react to give the product. **Thus, the equilibrium shifts to the right, reaction goes forward.**

Adding a product will stress the system on the product side. To relieve that stress, some product must react to give the reactant. **Thus, the equilibrium shifts to the left, reaction goes backward.**

Removing a reactant will stress the system on the reactant side. To relieve that stress, some product must react to give the reactant. **Thus, the equilibrium shifts to the left, reaction goes backward.**

Removing a product will stress the system on the product side. To relieve that stress, some reactant must react to give the product. **Thus, the equilibrium shifts to the right, reaction goes forward.**

Adding a species that has a common ion will shift the equilibrium depending on which side has a chemical that has a common ion with the added species. If the right side has the chemical with the common ion, the equilibrium will shift to the left and if the left side has that common ion, the equilibrium will shift to the right to balance that added species.

In this experiment, you will find that all four parts, A-D, that have concentration change. Observe carefully and decide on what kind of stress caused which direction shift in equilibrium.

2. Temperature Change

Temperature change plays an important role in shifting equilibrium for reactions that are heat controlled i.e., thermochemical processes. Such reactions are either endothermic or exothermic.
Exothermic reactions: Consider heat as the product
Endothermic reactions: Consider heat as the reactant.

Take an example of combustion of hydrogen gas:

$$2H_2\,(g) + O_2\,(g) \rightleftharpoons 2H_2O\,(g) + \text{Heat}$$

This is an exothermic reaction and heat is considered as a product. Thus, if temperature is increased in this reaction, the stress is created on the product side and the equilibrium shifts to the left giving more reactants. If this reaction is cooled instead, more product is formed, i.e., equilibrium shifts to the right.

The case is opposite for the endothermic reaction: heating shifts to the right, cooling shifts the equilibrium to the left.

In this experiment, you will see parts A and B have heat effect in equilibrium.

3. Pressure Change (Gas-phase reactions only)

Volume (V) and pressure (P) are interrelated in gaseous processes and reactions as stated by Boyle's law.

Increase in pressure (thus decrease in volume) will shift the gaseous equilibrium to the smaller number of moles side and vice-versa.

$$3H_2\,(g) + N_2\,(g) \rightleftharpoons 2NH_3\,(g)$$

If we take the example of ammonia above, the increase in pressure (or decrease in volume) of the container will increase the partial pressure of the gas in the container and mole fraction rises. Rise in mole fraction is "stress" that needs to be reduced by shifting the equilibrium to the right where the number of moles is low. The rise in concentration had to be balanced by lowering the concentration i.e., going toward the lower moles side.

Decrease in pressure (increasing volume) will shift the equilibrium to the left, having more moles.

But, if the moles on both sides are equal, there will be no effect of pressure or volume change.

4. pH Change

Change in pH also changes the equilibrium. There are basically three pH ranges: acidic, neutral, and basic. Since we must add acid or base (which are chemicals) to change the pH, the equilibrium shift due to pH change can be easily understood by taking it as adding or removing chemicals.

Add acid to the equilibrium, shifts to low pH by neutralizing all the bases partially formed at the equilibrium
Add base to the equilibrium, shifts to high pH by neutralizing all the acids partially formed at the equilibrium.

5. Add a Catalyst

Since a catalyst does not take part in the chemical reaction itself, it does not have a role in changing the overall concentration of the equilibrium. However, a catalyst does change the rate of reaction: i.e., it makes the reaction take a faster route and the equilibrium can be reached earlier. The equilibrium constant, K, for a catalyzed reaction and the uncatalyzed reactions will be the same.

Adding a catalyst does not shift the equilibrium.

Name _____

Experiment 5 | Le-Châtelier's Principle: Shift of Equilibrium

Pre-laboratory Questions

Complete this page before coming to the lab. Read the information given to answer the following questions.

Q1. What are the factors that affect the shift in equilibrium? List them.

Q2. What is "stress"? What are the factors that cause a "stress"?

Q3. What is the effect on equilibrium of adding or removing a chemical?

Q4. What is the effect of heating an exothermic reaction and cooling an endothermic reaction?

Q5. State Le Châtelier's principle in your own words.

Instructor's approval_____

Materials and Chemicals

Part A: Heat plate, ice bath, DI water, test tube rack, disposable pipets, test tubes, test tube clamp, two 250-mL beakers, 10-mL graduated cylinder, two 100-mL beakers, 125-mL Erlenmeyer flask, 0.05M $Fe(NO_3)_3$ solution, 0.05M KSCN solution, 0.1M $Fe(NO_3)_3$ solution, 0.1M KSCN solution, 0.1 M $AgNO_3$ solution, 0.1 M NaOH solution

Part B: 3 test tubes, heat bath, ice bath, DI water, test tube rack, disposable pipets, cobalt (II) chloride solution, 6M HCl solution

Part C: 2 test tubes, test tube rack, DI water, bromothymol blue solution, 1M HCl solution, 1M NaOH solution

Part D: 3 test tubes, DI water, calcium hydroxide powder, scoop, glass rod, centrifuge, 10-mL graduated cylinder, 6M NaOH solution, 1M $CaCl_2$ solution, 6M HCl solution

Procedure

Reaction A: Thiocyanate reaction

1. Bring three clean and dry 100-mL beakers and into one of them using a disposable pipet, add about 5 mL of 0.05M $Fe(NO_3)_3$ solution. This is your stock $Fe(NO_3)_3$ solution. Label it as *0.05Fe.*

2. Into another 100-mL beaker using a disposable pipet, add about 5 mL of 0.05M KSCN solution. This is your stock KSCN solution. Label it as *0.05K.*

3. Into the remaining beaker, add some DI water and dip a disposable pipet. Label it as *W.*

4. Bring two 250-mL beakers. One of them is used for hot bath and the other for ice bath. For hot bath, add about half-full tap water into the beaker and set it for heating on the hot plate on medium heat. For ice bath, place about half-full ice and add tap water just to cover the ice.

5. Bring seven identical test tubes and position them upright onto the test tube rack. To each of these 7 test tubes, add 10 drops of *0.05Fe* solution and 10 drops of *0.05K* solution using disposable pipets. Mix well.

   <u>Equilibrium Solution</u>

6. Test tube 1: This is your control solution at equilibrium. Do nothing to this test tube other than recording the observation on the data page. Your other test tubes will be matched with this test tube for comparison.

   <u>Equilibrium Shift</u>

7. Test tube 2: add 2 drops of 0.1M $Fe(NO_3)_3$ solution available on the instructor's desk, not on your table. Mix well and compare with the control solution. Record your observation on the data page.

8. Test tube 3: add 2 drops of 0.1M KSCN solution available on the instructor's desk, not on your table. Mix well and compare with the control solution. Record your observation on the data page.

9. Test tube 4: add 2 drops of 0.1 M $AgNO_3$ solution. Mix well and record your observation on the data page.

10. Test tube 5: add 2 drops of 0.1 M NaOH solution. Mix well and record your observation on the data page.

11. Test tube 6: Place it in the hot water bath for about 2 minutes. Compare with the control solution. Record your observation.

12. Test tube 7: Place it in the ice-cold bath for about 4 minutes. Compare with the control solution. Record your observation.

13. Keep the hot water bath and the ice bath for Part B. Throw the content of the test tubes and the beakers in the designated waste container.

Reaction B: Cobalt (II) Chloride Reaction

1. Bring three test tubes. In one of them, add 10 mL provided cobalt (II) chloride solution prepared in ethanol. Add drops of DI water until the color change could be noticed. Distribute this solution into other two test tubes so that all three test tubes have equal amounts of the solution.

2. Test tube 1: This is your control. Do nothing to this solution but keep the record of your observation on this test tube on the data page.

3. Test tube 2: Add 6M HCl solution dropwise until the color change is observed. Record your observations on the data sheet. **(Caution!: This HCl is highly corrosive and Cobalt (II) chloride is a toxic chemical)**

4. Test tube 3: Step I: Place the test tube into the hot bath until color change is observed. Record your observation.
   Step II: Transfer the test tube from the hot bath to the cold bath. Notice the color change again and record on the data page.

5. Dispose of the chemicals in the designated container and clean the test tubes properly.

Reaction C: Bromothymol blue Reaction

1. Bring two test tubes. Add DI water to each of them up to half full. Add five drops of provided bromothymol blue solution. Mix well.

2. Test tube 1: This is your control. Do nothing to this solution but keep the record of your observation on this test tube on the data page.

3. Test tube 2:

   Step I: Add drops of 1M HCl solution while shaking the test tube to mix well until you see a color change. Record your observation.

   Step 2: Add drops of 1M NaOH solution while shaking the test tube to mix well until you see a color change. Record your observation.

4. Dispose of the chemicals in the designated container and clean the test tubes properly.

Reaction D: Calcium hydroxide precipitation reaction

1. Bring three test tubes. To the first two test tubes, Add DI water to make them 2/3rd full (at least 6 mL). If not 6 mL bring bigger test tubes. Leave the third one empty.

   Equilibrium Solution

2. Test tube 1: Add portions of the given calcium hydroxide powder with the tip of a scoop slowly. Every time you add a portion mix the content of the test tube with a glass rod slowly to dissolve. Once the calcium hydroxide stops dissolving, i.e. milky mixtures forms, stir with glass rod one more time to dissolve any remaining solute. Record your observation on the data page.

3. Test tube 1 and Test tube 2: Put these two test tubes in two opposite slots of the centrifuge. Close the lid. Run the centrifuge for one full minute. Wait for the centrifuge to stop completely before opening the lid. Take the two test tubes out. Record your observation on the data page.

4. Transfer 5 mL of the clear top content of the test tube1 into a graduated cylinder, without disturbing the settled solid at the bottom. Place this 5 mL solution into test tube 3. You are ready for equilibrium shift.

   Equilibrium Shift

5. Test tube 3: Add 5 mL of 6M NaOH solution. Mix well. Record your observation.

6. Same test tube 3 above: Next, add 5 mL of 1M $CaCl_2$ solution (Use a separate or a clean graduated cylinder). Mix well. Record your observation.

7. Same test tube 3 above: Next, add 8 mL of 6M HCl solution (Use a separate or a clean graduated cylinder). Mix well. Record your observation.

8. Dispose of the chemicals in the designated container and clean the apparatus properly.

Date _____

Name _____

Lab Partner _____

Experiment 5 | Le-Châtelier's Principle: Shift of Equilibrium

Data Sheet

Part A: Thiocyanate reaction

$$Fe(H_2O)_6^{3+}\ (aq) + SCN^-\ (aq) \rightleftharpoons Fe(H_2O)_5(SCN)^{2+}\ (aq) + H_2O\ (l)$$

(golden yellow) (colorless) (reddish-brown)

Observation of Test tube 1_____

Observation of Test tube 2 (adding $Fe(NO_3)_3$)_____

A. Which ion caused the "stress" in the equilibrium system? _____

B. Which way did the equilibrium shift? _____

C. What happened to the concentration of SCN^-? _____

D. What happened to the concentration of $FeSCN^{2+}$? _____

E. Which type of equilibrium shift is this? _____

Observation of Test tube 3 (adding KSCN) _____

A. Which ion caused the "stress" in the equilibrium system? _____

B. Which way did the equilibrium shift? _____

C. What happened to the concentration of Fe^{3+-}? _____

D. What happened to the concentration of $FeSCN^{2+}$? _____

E. Which type of equilibrium shift is this? _____

Observation of Test tube 4 (adding $AgNO_3$) _____

A. What is the formula of the precipitate formed by the addition of $AgNO_3$? _____

B. Which ion got the concentration changed due to $AgNO_3$? _____

C. Was the concentration of that ion increased or decreased? _____

D. Which direction did the equilibrium shift$^+$? _____

Observation of Test tube 5 (adding NaOH) _____

A. What is the formula of the precipitate formed by the addition of NaOH? _____

B. Which ion got the concentration changed due to NaOH? _____

C. Was the concentration of that ion increased or decreased? _____

D. Which direction did the equilibrium shift[+]? _____

Observation of Test tube 6 (heating) _____

Explanation for that observation _____

_____

_____

Observation of Test tube 7 (cooling) _____

Explanation for that observation _____

_____

_____

Part B: Cobalt (II) chloride equilibrium

$$\underset{\text{(pink)}}{Co(H_2O)_6^{2+}\ (aq)} + 4Cl^-\ (aq) \rightleftharpoons \underset{\text{(blue)}}{CoCl_4^-\ (aq)} + 6H_2O\ (l)$$

Observation of Test tube 1(adding water) _____

A. Which molecule caused the "stress" in the equilibrium system? _____

B. Which way did the equilibrium shift? _____

C. What chemical changed into which chemical to cause this shift in equilibrium? _____

_____

Observation of Test tube 2 (adding HCl) _____

A. Which ion caused the "stress" in the equilibrium system? _____

B. Which way did the equilibrium shift? _____

C. Write the chemical equation to show the shift.

_____

Observation of Test tube 3 Part I (heating) _____

A. Which caused the "stress" in the equilibrium system? _____

B. Which way did the equilibrium shift? _____

C. Explain this shift based on Le Châtelier's Principle _____

_____

Observation of Test tube 3 Part II (cooling) _____

A. Which caused the "stress" in the equilibrium system? _____

B. Which way did the equilibrium shift? _____

C. Explain this shift based on Le Châtelier's Principle _____

_____

Part C: Bromothymol Blue ($C_{27}H_{28}Br_2O_5S$) Equilibrium

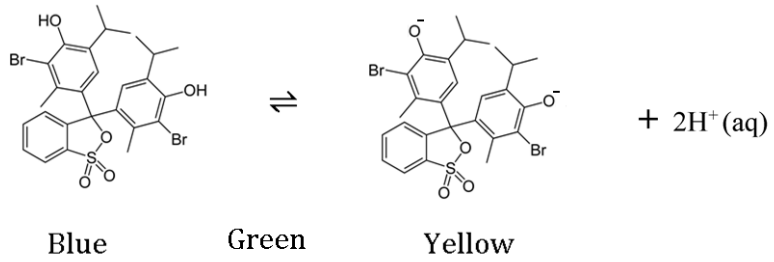

Observation of Test tube 1(adding water) _____

Observation of Test tube 2 (Step 1: adding HCl) _____

A. Which ion caused the "stress" in the equilibrium system? _____

B. Which way did the equilibrium shift? _____

C. Write the chemical equation to show the shift.

_____

Observation of Test tube 2 (Step 2: adding NaOH) _____

A. Which molecule caused the "stress" in the equilibrium system? _____

B. Which way did the equilibrium shift? _____

C. What chemical changed into which chemical to cause this shift in equilibrium? Explain on the basis of Le Châtelier's Principle.

_____

_____

Part D: Calcium hydroxide precipitation equilibrium

$$\underset{\text{(white precipitate)}}{Ca(OH)_2\ (s)} \rightleftharpoons \underset{\text{(colorless solution)}}{Ca^{2+}\ (aq) + 2OH^-\ (aq)}$$

Observation of Test tube 1 (after mixing calcium hydroxide)_____

Observation of Test tube 1 (after centrifuge)_____

Observation of Test tube 3 (adding NaOH) _____

A. Which ion caused the "stress" in the equilibrium system? _____

B. Which way did the equilibrium shift? _____

C. Explain on the basis of Le Châtelier's Principle, this shift in equilibrium _____

_____

_____

Observation of Test tube 3 (adding $CaCl_2$) _____

A. Which ion caused the "stress" in the equilibrium system? _____

B. Which way did the equilibrium shift? _____

C. Explain on the basis of Le Châtelier's Principle, this shift in equilibrium _____

_____

_____

Observation of Test tube 3 (adding HCl) _____

A. Which ion caused the "stress" in the equilibrium system? _____

B. Which way did the equilibrium shift? _____

C. Explain on the basis of Le Châtelier's Principle, this shift in equilibrium _____

_____

_____

Experiment 6 | Kitchen Chemistry

Objective: 1. To prepare a universal indicator using red cabbage
2. To measure the pH of household chemicals using the universal indicator

Introduction

As you have studied from the textbook, the *p*H value ranges form 1-14. *p*H values directly given the measurement of the concentration of acid present in the solution. The acid concentration is best represented in the form of the hydrogen ion concentration, $[H^+]$, which in turn is represented by the more stable hydronium ion concentration, $[H_3O^+]$, in the solution of the substance in water. *p*H and hydronium ion concentration are related as given in the following formula:

$$pH = -\log [H_3O^+] \text{ .....equation (i)}$$

Even though *p*H directly gives the measurement of the acid content in a solution, it also gives the measurement of the base content in the solution as well from the same value. A *p*H of < 7 represents and acidic solution while a pH of > 7 represents an alkaline solution. The alkalinity of a solution can be also directly measured in terms of *p*OH as given in the following formula:

$$pOH = -\log [OH^-] \text{ .....equation (ii)}$$

So, if we know the hydroxide ion concentration of the solution, we know the *p*OH value of the solution directly. But there is another formula connecting *p*H and *p*OH of the same solution. The sum of these two quantities for a given solution should be always 14, therefore, the relationship between the two quantities is given in the following formula:

$$pH + pOH = 14 \text{ .....equation (iii)}$$

Table 6.1: Relationship among *p*H, *p*OH, $[H_3O^+]$, and $[OH^-]$

*p*H	*p*OH	$[H_3O^+]$	$[OH^-]$	Acidity	Alkalinity
-1	15	1×10^{1}	1×10^{-15}	High	Low
0	14	1×10^{0}	1×10^{-14}		
1	13	1×10^{-1}	1×10^{-13}		
2	12	1×10^{-2}	1×10^{-12}		
3	11	1×10^{-3}	1×10^{-11}		
4	10	1×10^{-4}	1×10^{-10}		
5	9	1×10^{-5}	1×10^{-9}		
6	8	1×10^{-6}	1×10^{-8}		
7	7	1×10^{-7}	1×10^{-7}	Neutral	Neutral
8	6	1×10^{-8}	1×10^{-6}		
9	5	1×10^{-9}	1×10^{-5}		
10	4	1×10^{-10}	1×10^{-4}		
11	3	1×10^{-11}	1×10^{-3}		
12	2	1×10^{-12}	1×10^{-2}		
13	1	1×10^{-13}	1×10^{-1}		
14	0	1×10^{-14}	1×10^{0}		
15	-1	1×10^{-15}	1×10^{1}	Low	High

Table 6.1 above shows the interrelationship among the four quantities mentioned above. The table also shows the relative acidity and the alkalinity trend based on the concentrations of the hydronium ion and the hydroxide ion in a solution as well as the *p*H and *p*OH values.

The hydronium and the hydroxide ion concentration in the same given solution are also related in terms of the dissociation constant, K_w

$$K_w = [H_3O^+] \times [OH^-] \text{ .....equation (v)}$$

The higher is the value of this constant for certain acid, the more acidic it is. For water at 25ºC, the acid dissociation constant value is,

$$K_w = 1.0 \times 10^{-14} \text{.....equation (vi)}$$

Kitchen chemistry is a term given to those chemical processes which does not need an actual lab setting to perform, mainly because of safety purpose. The precautions taken in a kitchen will be enough to carry out kitchen chemistry experiments. Also, the materials used in kitchen chemistry are household chemicals which are safe to be disposed of in the sink. This is the only reason this lab is given the title as given, otherwise it does not mean that you bring food in the lab and start to cook! However, the opposite is true, i.e., you can perform these experiments in your kitchen too, provided you have all the household chemicals and the indicators at once in your house.

In this experiment, you will extract juice from red cabbage by boiling the cabbage leaves in water. This extract does not need any treatment and can be used directly as a universal indicator solution. A **commercial universal indicator** is a systematically prepared solution of several indicators in a definite concentration and volumes. It identifies the acidity or alkalinity of water-soluble chemicals over a wide range of pH values. The color distinction identified by a commercial universal indicator is smooth and clear.

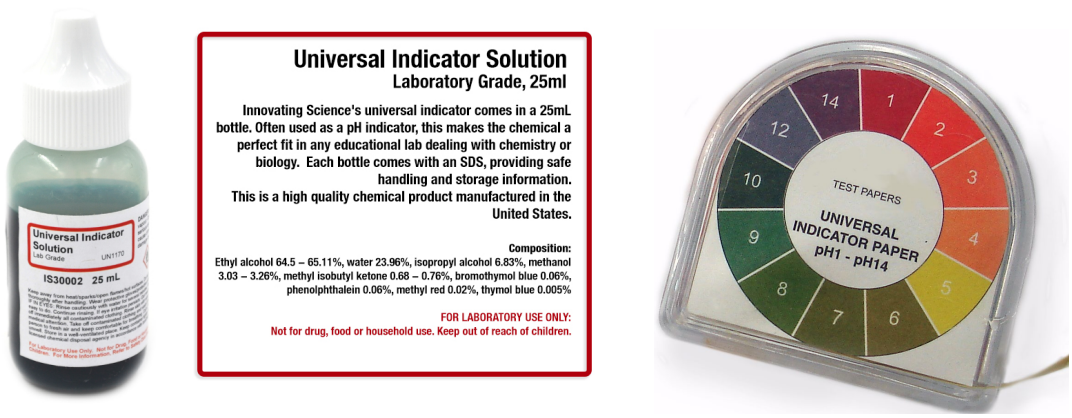

Figure 6.1: Universal indicator solution and the universal indicator paper with the color chart on the cover.

Figure 6.1 shows a universal indicator solution bottle on the left side and a color chart on the right side. The universal indicator paper inside the spool is a greenish-yellow colored paper which can be dipped in the test solution. The paper changes the color according to the pH level of the solution. As seen on the color chart, it has a full range of pH from 1-14. The color comparison, however, is qualitative and gives the pH value to a whole number only. For a precise measurement of pH, we need to use a pH electrode which you will use in the upcoming experiments.

The universal indicator solution you prepare in this lab may not give you clear distinction of color with some solutions. For best results, you should dissolve the provided household chemical in certain amount of DI water and transfer the clear solution to a test tube. Any turbidity, suspended particles, bulk material, or non-uniformly dissolved mixture will cause variation in color that gives you confusion on the resulting color.

Name _____

Experiment 6 | Kitchen Chemistry

Pre-laboratory Questions

Complete this page before coming to the lab. Read the information given to answer the following questions.

Q1. Calculate the *p*H of a solution that has the $[H_3O^+] = 6.3 \times 10^{-12}$ M.

Q2. Calculate the *p*H of a solution that has the $[OH^-] = 6.3 \times 10^{-12}$ M.

Q3. If *p*H of a solution is 4.7, what is the *p*OH? If *p*OH of a solution is 12.2, what is the *p*H?

Q4. What are the three methods to know the *p*H value of a solution, mentioned in this experiment?

Q5. What is the best idea to get a distinct color of a provided lab sample?

***Instructor's approval*_____**

Materials and Chemicals

400-mL beaker, 250-mL beaker, heat plate, red cabbage, universal indicator color chart, 20 medium-size test tubes, 4 test tube racks, provided household chemicals (possible list: ammonia, vinegar, colorless dish soap, sprite, clear shampoo, lime or lemon juice, milk of magnesia, tap water, DI water, bleach, milk, hydrogen peroxide, syrup, honey etc.)

Procedure

1. Bring a 400-mL beaker and add about half full of DI water. Bring the provided cut pieces of red cabbage and place in the beaker for boiling. Let it boil for 4 full minutes.

2. Transfer the juice from the beaker into a 250-mL beaker. Let it cool on the tabletop. This is your universal indicator extracted from the red cabbage. Record the observation of the extract on the data sheet.

3. Bring 20 test tubes and four test tube racks. Rinse the test tubes thoroughly and shake them dry.

4. Position the test tubes upright onto the test tube rack. You can number the test tubes or simply arrange in two sets of left-to-right order from 1-10.

5. First set of 1-10 test tubes will be used for universal indicator paper. The second set of 1-10 test tubes will be used for cabbage juice indicator.

6. Add each provided household chemical about $1/5^{th}$ full into the test tube and label if needed. If your chemical is thick (syrupy), add some of this chemical into a beaker and add about 10 mL DI water slowly avoiding any fizz or foam. Stir with a glass rod slowly so that the chemical dissolves completely and a transparent solution is formed. Transfer this clear solution to the desired test tubes.

7. Add the names of the chemicals into the data table as you prepare them.

8. Bring the provided universal indicator paper and the universal indicator solution you prepared to begin testing the solutions.

9. Test the two test tubes numbered 1: first one with the paper, second one with the solution. For the solution, use about 1 mL for each sample using a disposable pipet. You may need more depending on the concentration of the solution you prepared. Mix the content of the test tube for better result.

10. Using the universal indicator color chart, match the right color of the chart with the paper color and the solution color and assign a number matching that color. Record your observation for each test tube on the data page.

11. Complete the tests on the rest of the test tubes 2-10. Record on the data page.

12. As stated on the data page, now rearrange these colors with the lowest pH on top and the highest pH at the bottom.

13. As rearranged on the data sheet, now rearrange the test tubes on your rack with the least pH value leftmost and highest pH rightmost.

14. Take a good picture of this arrangement of the test tubes, trying to display in the picture the color difference. You will need to attach this picture on your lab report on the Observation section.

15. Answer the questions that follow and clean up as needed. Contents of all the test tubes in this part of the experiment (Part A) can go down the drain.

Date _____

Name _____

Lab Partner _____

Experiment 6 | Kitchen Chemistry

Data Sheet

Observation of the cabbage extract: _____

List of chemicals that do not need to make solutions: _____

_____

List of chemicals that need to make solutions for better result: _____

_____

Fill the following chart for the observation of color of the household chemical with the indicators

Test tube #	Household Chemical	Color with Cabbage Juice Universal Indicator	Color with Universal Indicator Paper	Matching pH

Now rearrange above chart with the lowest pH value on top and the highest pH value at the bottom**.**

pH Value	Household Chemical	Color Decided from the two Indicators

Answer the following questions

Q1. What pattern did you find with the color change going from the lowest pH to the highest pH? Give a brief explanation.

Q2. What pattern did you find with the pH going from the bluest (violet) color to the reddest color (think about the color of the rainbow)? Give a brief explanation.

Q3. Were the assigned pH values appropriate as expected to the chemical's nature? Report any anomaly.

Experiment 7 | pH Titration I: K_a of a Weak Monoprotic Acid

Objective: 1: To perform titration between a strong base and a weak monoprotic acid using a pH meter
2: To calculate the value of the acid dissociation constant, K_a of the monoprotic acid

Introduction

Acetic acid, $HC_2H_3O_2$, is a **weak acid** since this acid breaks down in its aqueous solution only partially into the hydronium ion, H_3O^+ (aq), and the acetate ion, $C_2H_3O_2^-$ (aq), as given in the following equilibrium equation:

$$\mathbf{HC_2H_3O_2\ (l) + H_2O\ (l) \rightleftharpoons C_2H_3O_2^-\ (aq) + H_3O^+\ (aq) + HC_2H_3O_2\ (l)}\ \textbf{.....equation } \textit{(i)}$$

As you can see from the right side of the above equation that some of the acid is still left as unionized product. The ionization of such compounds is not 100% unlike the strong electrolytes such as NaOH or HCl. So, even if we use all the required NaOH for the completion of the neutralization process, not all the acetic acid will be consumed. Rather, some of the acetate ion on the right side will combine with Na^+ ion produced by the added base in the solution as given in the following equation.

$$\mathbf{C_2H_3O_2^-\ (aq) + H_3O^+\ (aq) + HC_2H_3O_2\ (l) + NaOH\ (aq) \rightleftharpoons NaC_2H_3O_2\ (aq) + 2H_2O\ (l)}\ \textbf{...equation } \textit{(ii)}$$

This creates buffering action, and the pH does not change. This results into wrong calculation of the volume of NaOH and consequently wrong calculations of dissociation constant, K_a. To avoid this situation, we perform what is called **Half-Titration**. This is the method to know when half of the total required amount of base has been added and from that, to know exactly when the concentration of the acetate ion and the undissociated acid are equal. When the acetate ion, $[C_2H_3O_2^-]$ and the acetic acid, $[HC_2H_3O_2]$ concentrations are equal, let us think for a moment of the following Henderson-Hasselbalch equation:

$$\boldsymbol{pH = pK_a + log\frac{[C_2H_3O_2^-]}{[HC_2H_3O_2]}}\ \textbf{.....equation } \textit{(iii)}$$

The situation of the acetate ion and the acetic acid concentration being equal is possible at the time of **Half-Equivalence Point** which is a halfway through the equivalence point of the titration. Since $[C_2H_3O_2^-] = [HC_2H_3O_2]$, log (1) = 0, the above equation simply becomes

$$\boldsymbol{pH = pK_a}\ \textbf{.....equation } \textit{(iv)}$$

So, after we find the pH at the half-equivalence point, we basically find the pK_a of the acid. The we use the following equation to find the K_a from pK_a

$$\boldsymbol{K_a = 10^{-(pKa)}}\ \textbf{.....equation } \textit{(v)}$$

So, we raise the pK_a to the negative power of 10 to get the K_a. The acid dissociation constant values are unique to specific acids and the theoretical values are given in the Table 7.1 below.

Table 7.1 The theoretical values of acid dissociation constant for common monoprotic acids

Name of the acid	Molecular Formula	K_a value
Hydroiodic acid	HI	2.0×10^{9}
Nitric acid	HNO_3	2.3×10^{1}
Hydrogen sulfate	HSO_4^-	1.2×10^{-2}
Chlorous acid	$HClO_2$	1.2×10^{-2}
Hydrofluoric acid	HF	7.2×10^{-4}
Nitrous acid	HNO_2	4.0×10^{-4}
Acetic acid	$HC_2H_3O_2$	1.8×10^{-5}
Hypochlorous acid	HOCl	3.5×10^{-8}
Hydrocyanic acid	HCN	6.2×10^{-10}
Ammonium ion	$NH4^+$	5.6×10^{-10}
Water	H_2O	1.0×10^{-14}

The higher is the K_a value for an acid, higher is the acidity or stronger is the acid.

Name _____

Experiment 7 | pH Titration I: K_a of a Weak Monoprotic Acid

Pre-laboratory Questions

Complete this page before coming to the lab. Read the information given to answer the following questions.

Q1. What is the difference between a weak acid and a strong acid? Give examples.

Q2. Why does the titration of a weak acid with a base not go to 100% completion?

Q3: How does half-titration technique work well for a weak acid titration?

Q4: Calculate the pK_a of acetic acid whose dissociation produced 0.001M acetate ion when the acid concentration was 0.003M and the pH of that solution at equilibrium was 5.6.

Q5: From the above value of pKa, calculate the value of dissociation constant of acetic acid

***Instructor's approval*_____**

Materials and Chemicals

Burette stand with clamp, 50-mL burette, 25-mL pipet, pipet pump, pH electrode, computer interface, one 250-mL beaker, two 100-mL beakers, 50-mL graduated cylinder, funnel, standard 0.1 M NaOH, 0.1M acetic acid solution, phenolphthalein indicator

Procedure

1. Bring a pH electrode and a computer interface. Connect the electrode with the interface. Bring the provided buffers and calibrate the electrode following the procedure given on the electrode leaflet. Once the calibration is complete, the electrode is ready for use for this experiment as well as your next experiment. Mark this electrode for your own use next week as well.

2. Bring two 100-mL clean and dry beakers and label one as *"Acid*" and the other as *"Base*".

3. Add 50 mL 0.1M acetic acid to the *Acid* beaker and about 50 mL 0.1M NaOH into the *Base* beaker.

4. Bring a clean burette and rinse it with the base once. Fill the burette with the base up to 0 mark. Set up the burette into the burette stand.

5. Using a 25 mL pipet and a pipet pump, measure out 25 mL of the acetic acid. Transfer the acid into the 250 mL beaker. Place a stir bar into the beaker. Place the beaker on top of the burette stand base and run the stir bar at low speed.

6. Add a drop of phenolphthalein indicator into the beaker.

7. Insert the pH electrode into the beaker. Attach the electrode to the burette clamp so that you do not need to hold it during the titration. Take the first reading of pH at zero volume of NaOH added by pressing the play button on the interface. Once the reading is stable, record it on the data table.

8. Add 2 mLs of NaOH from the burette and record the pH. Keep adding NaOH and recording pH until 10 mL total is added. Then add 1 mL until 18 mL total is added. Then start recording at the interval of 0.5 mL each until the pink color of indicator is more persistent and the jump in pH is observed. Once the pink color remains in the solution, you can add 2 mL interval until 40 mL.

9. Repeat steps 5-8 for trial 2 of the experiment.

10. Clean-up and dispose of the chemicals as directed. Clean the apparatus properly and let them dry on the rack.

Date ______________________________

Name ______________________________

Lab Partner ______________________________

Experiment 7 | pH Titration I: K_a of a Weak Monoprotic Acid

Data Sheet

Provided strength of NaOH solution. ____

Volume of acetic acid added to the reaction beaker ______________________

Record the volume of NaOH added and the pH value obtained for each trial in the following table:
(Alternatively, you can record the data directly in a spreadsheet on your laptop)

Volume of NaOH	pH Value	
	Trial 1	Trial 2

Volume of NaOH	pH Value	
	Trial 1	Trial 2

Transfer the data into Excel or Google worksheet and plot the graph using the volume of base added along the x-axis and the pH along the y-axis for both trials. Create a plot for each trial.

On each plot, find the steepest rise in pH and draw a straight line through the slope. Find the mid-point of the slope and the corresponding pH value.

pH at the equivalence point: Trial 1 _____ Trial 2 _____

pH at the half-equivalence point: Trial 1 _____ Trial 2 _____

Average half-equivalence point pH _____

<u>Calculate pK_a for the acetic acid below</u>

pK_a for the acetic acid (calculated above) _____

<u>Calculate K_a for the acetic acid below</u>

K_a for the acetic acid (calculated above) _____

K_a for the acetic acid (actual value) _____

<u>Calculate percentage error</u>

Percentage error _____

Experiment 8 | pH Titration II: Titration Curve of a Triprotic Acid

Objective: 1: To perform titration between a strong base and a triprotic acid using pH meter
2: To calculate the multiple K_a values of the triprotic acid

Introduction

Acetic acid, $HC_2H_3O_2$, is a **weak acid** and you performed that titration in Experiment 7. Acetic acid has one proton available for donation in the aqueous solution, thus it is a **monoprotic acid**, meaning: capable of donating only one proton. Moving on to this experiment, we will study the titration of a weak **triprotic acid**, phosphoric acid. A triprotic acid is the one capable of giving three protons in its aqueous solution. The ionization of phosphoric acid is given in the following three steps:

$$H_3PO_4\ (aq) \rightleftharpoons H_2PO_4^-\ (aq) + H^+\ (aq) \ldots\ldots\ldots\text{equation (i)}$$

$$H_2PO_4^-\ (aq) \rightleftharpoons HPO_4^{2-}\ (aq) + H^+\ (aq) \ldots\ldots\ldots\text{equation (ii)}$$

$$HPO_4^{2-}\ (aq) \rightleftharpoons PO_4^{3-}\ (aq) + H^+\ (aq) \ldots\ldots\ldots\text{equation (iii)}$$

As you see from above equations, there are three protons available overall from the phosphoric acid. When we react phosphoric acid with a strong base NaOH, the neutralization reaction occurs as follows in three steps:

$$H_3PO_4\ (aq) + NaOH\ (aq) \rightleftharpoons NaH_2PO_4\ (aq) + H_2O\ (l) \ldots\ldots\ldots\text{equation (iv)}$$

$$NaH_2PO_4\ (aq) + NaOH\ (aq) \rightleftharpoons Na_2HPO_4\ (aq) + H_2O\ (l) \ldots\ldots\ldots\text{equation (v)}$$

$$Na_2HPO_4\ (aq) + NaOH\ (aq) \rightleftharpoons Na_3PO_4\ (aq) + H_2O\ (l) \ldots\ldots\ldots\text{equation (vi)}$$

The three steps above are practically possible in the titration reactions carried out in a controlled way. It will be visible in the form of pH titration curve from the titration carried out between phosphoric acid and NaOH solution. As seen in Experiment 7, the titration has to be carried out so that the equivalence points are determined from the steepest rise in the titration curves and the pH for half-titration should be calculated from the Henderson-Hasselbalch equation for each proton available in phosphoric acid.

First Proton: $$pH = pK_a + log\frac{[H_2PO_4^-]}{[H_3PO_4]} \ldots\ldots\ldots\ldots equation\ (vii)$$

Second Proton: $$pH = pK_a + log\frac{[HPO_4^{2-}]}{[H_2PO_4^-]} \ldots\ldots\ldots\ldots equation\ (viii)$$

Third Proton: $$pH = pK_a + log\frac{[PO_4^{3-}]}{[HPO_4^{2-}]} \ldots\ldots\ldots\ldots equation\ (ix)$$

At **Half-Equivalence Point,** for each of the above equations, the concentration of the ion ion on the right side of the equilibrium will be equal to the concentration of the acid on the left side. The net equation left becomes

$$pH = pK_a \text{ .....equation (x)}$$

The pH value for the first proton is the lowest value since this proton is the most acidic proton. There will be a second pH value for the second proton and a third pH value for the third proton and the pH value goes increasing. As in the previous experiment, after we find the pH at the half-equivalence point, it equals the corresponding pK_a of the acid for that proton. Then, we use the following equation to find the corresponding K_a from the value of the pK_a

$$K_{a1} = 10^{-(pK_{a1})} \text{ ..... equation (xi) for first dissociation constant}$$

$$K_{a2} = 10^{-(pK_{a2})} \text{ ..... equation (xii) for second dissociation constant}$$

$$K_{a3} = 10^{-(pK_{a3})} \text{ ..... equation (xiii) for third dissociation constant}$$

It is quite natural for phosphoric acid to have three dissociation constants, one for each proton. We will measure the first two dissociation constant for phosphoric acid in this experiment. The third dissociation constant, K_{a3} is difficult to measure since the curve for the third proton consumption is not as steep as the first two. The acid dissociation constants for common polyprotic acids are given in Table 8.1.

Table 8.1 The theoretical values of acid dissociation constants for common polyprotic acids

Name of the acid	Molecular Formula	K_{a1} value	K_{a2} value	K_{a3} value
Phosphoric acid	H_3PO_4	7.5×10^{-3}	6.2×10^{-8}	4.8×10^{-13}
Arsenic acid	H_3AsO_4	5.5×10^{-3}	1.7×10^{-7}	5.1×10^{-12}
Sulfuric acid	H_2SO_4	1.0×10^{3}	1.2×10^{-2}	
Sulfurous acid	H_2SO_3	1.5×10^{-2}	1.0×10^{-7}	
Carbonic acid	H_2CO_3	4.3×10^{-7}	5.6×10^{-11}	
Oxalic acid	$H_2C_2O_4$	6.5×10^{-2}	6.1×10^{-5}	
Hydrosulfuric acid	H2S	1.0×10^{-7}	$\approx 10^{-19}$	

Name _____

Experiment 8 | pH Titration II: Titration Curve of a Triprotic Acid

Pre-laboratory Questions

Complete this page before coming to the lab. Read the information given to answer the following questions.

Q1. Is $H_2PO_4^-$ (aq) an acid? Give reason.

Q2. Why does H_3PO_4 have three dissociation constants?

Q3: Based on the three equations: *iv*, *v*, and *vi* in the Introduction section, how many mL of 0.1M NaOH will be needed if we use 25 mL of 0.1M H_3PO_4? Justify your answer.

Q4: Calculate the pK_a of the system having the $[PO_4^{3-}]$: $[HPO_4^{2-}]$ ratio as 0.8. The pH of the system at was found to be 8.7.

Q5: Why does this experiment not ask you to find the value of Ka_3 for phosphoric acid?

***Instructor's approval*_____**

Materials and Chemicals

Burette stand with clamp, 50-mL burette, 25-mL pipet, pipet pump, pH electrode, computer interface, one 250-mL beaker, two 100-mL beakers, 50-mL graduated cylinder, funnel, standard 0.1 M NaOH, 0.1M phosphoric acid solution,

Procedure

1. Bring the pH electrode you calibrated last week and a computer interface. Connect the electrode with the interface.

2. Bring two 100-mL clean and dry beakers and label one as *"Acid"* and the other as *"Base"*.

3. Add 50 mL 0.1M phosphoric acid to the *Acid* beaker and about 50 mL 0.1M NaOH into the *Base* beaker.

4. Bring a clean burette and rinse it with the base once. Fill the burette with the base up to 0 mark. Set up the burette into the burette stand.

5. Using a 25 mL pipet and a pipet pump, measure out 25 mL of the phosphoric acid. Transfer the acid into the 250 mL beaker. Place a stir bar into the beaker. Place the beaker on top of the burette stand base and run the stir bar at low speed.

6. Insert the pH electrode into the beaker. Attach the electrode to the burette clamp. Take the first reading of pH at zero volume of NaOH added by pressing the play button on the interface. Once the reading is stable, record it on the data table.

7. Add 2 mLs of NaOH from the burette and record the pH. Keep adding NaOH and recording pH until 10 mL total is added. Then add 1 mL until 18 mL total is added. Then start recording at the interval of 0.5 mL each until the jump in pH is observed. Once the pH returns to increase slowly, you can add 2 mL interval until around 40 mL NaOH. Once you see the slight increase in pH again, start using 0.5 mL until after 55mL and then again around 75 mL. By this time you will already have an idea how the acid solution is behaving and figure out when to slow down the addition of NaOH.

8. Repeat steps 5-7 for trial 2 of the experiment.

9. Clean-up and dispose of the chemicals as directed. Clean the apparatus properly and let them dry on the rack.

Date ______________________________

Name ______________________________

Lab Partner ______________________________

Experiment 8 | pH Titration II: Titration Curve of a Triprotic Acid

Data Sheet

Provided strength of NaOH solution. ______________________________

Volume of phosphoric acid added to the reaction beaker ______________________________

Record the pH values against the volume of NaOH added in the following table, or directly save in a spreadsheet of your choice in your laptop.

Volume of NaOH	pH Value	
	Trial 1	Trial 2

Volume of NaOH	pH Value	
	Trial 1	Trial 2

Data table continued…

Volume of NaOH	pH Value	
	Trial 1	Trial 2

Volume of NaOH	pH Value	
	Trial 1	Trial 2

Transfer the data into Excel or Google worksheet and plot the graph using the volume of base added along the x-axis and the pH along the y-axis for both trials. Create a plot for each trial.

On each plot, find the steepest rise in pH and draw a straight line through the slope. Find the mid-point of the slope and the corresponding pH value. There should be at least two steepest regions in one curve. If your experiments go well around the third equivalence point, you should also see the third slightly steep region. But we are not calculating the third K_a for this acid in this experiment.

pH at the 1st equivalence point: Trial 1 ______________ Trial 2 _________________

pH at the 1st half-equivalence point: Trial 1 ________________ Trial 2 ________________

Average 1st half-equivalence point pH _____________________

Calculate pK_{a1} for the phosphoric acid below

pK_{a1} value (calculated above) _____

Calculate K_{a1} below

K_{a1} value (calculated above) _____

pH at the 2nd equivalence point: Trial 1 _____ Trial 2 _____

pH at the 2nd half-equivalence point: Trial 1 _____ Trial 2 _____

Average 2nd half-equivalence point pH _____

Calculate pK_{a2} for the phosphoric acid below

pK_{a2} value (calculated above) _____

Calculate K_{a2} below

K_{a2} value (calculated above) _____

Actual K_a values for phosphoric acid K_{a1} _____ K_{a2} _____

<u>Calculate Percentage error</u>

Percentage error K_{a1} _____ K_{a2} _____

Experiment 9 | K_{sp} of a Sparingly Soluble Salt

Objective: 1: To prepare the solution of a sparingly soluble salt of appropriate concentration
2: To construct a calibration curve using the standard solution
3: To find the concentration of the ions and to calculate the K_{sp}

Introduction

As we studied in University Chemistry I course, a salt is a chemical compound formed because of the reaction between an acid and a base. Depending on the nature of the acid and the base, the nature of a salt can also be acidic, basic, or neutral. An acid-base reaction is a double decomposition reaction usually producing water as a by-product along with a salt. Thus, the salt that is formed is in aqueous solution. Here are some acid-base reactions resulting into salt and water and some other reactions not purely acid-base reactions but can form a salt.

$$HCl\ (aq) + NaOH\ (aq) \rightarrow NaCl\ (aq) + H_2O\ (l)$$

$$H_2SO_4\ (aq) + Ba(OH)_2\ (aq) \rightarrow BaSO_4\ (s) + 2H_2O\ (l)$$

$$AgNO_3\ (aq) + HCl\ (aq) \rightarrow AgCl\ (s) + HNO_3\ (aq)$$

$$AgNO_3\ (aq) + K_2CrO_4\ (aq) \rightarrow Ag_2CrO_4\ (s) + 2KNO_3\ (aq)$$

The first reaction is a common acid-base reaction resulting into common salt, NaCl, which is water-soluble. That is the reason why NaCl in solution form is represented as aqueous (aq). The second salt, $BaSO_4$, is also formed from an acid-base reaction but this reaction is a precipitation reaction as well since the salt formed is insoluble in water and precipitates as solid. The third reaction is a reaction between an acid and a salt resulting into an acid and a salt again. This is also a precipitation reaction since the salt AgCl is an insoluble salt in water.

The fourth reaction above is of our interest. This is the reaction we will use in this experiment. Interestingly, this salt is formed from by mixing two salt solutions (both clear). The resulting compounds are both salts, one of them, potassium nitrate (KNO_3), is soluble in water and the other one, silver chromate (Ag_2CrO_4), is insoluble (sparingly soluble) in water. We will determine the solubility product constant, K_{sp} for silver chromate.

Silver chromate ionizes in its saturated solution as follows:

$$\mathbf{Ag_2CrO_4\ (s) \rightleftharpoons 2Ag^+\ (aq) + CrO_4^{2-}\ (aq)}\ \textbf{.....equation (i)}$$

This equation shows that there is an equilibrium established between the dissociated ions in the aqueous solution on the right and the solid salt on the left. This type of equilibrium is best represented in the form of the solubility product constant known as K_{sp}

$$\boldsymbol{K_{sp} = [Ag^+]^2\,[CrO_4^{2-}]}\ \textbf{.....equation (ii)}$$

A substance's solubility in water is best illustrated in the form of $\boldsymbol{K_{sp}}$**.** If the right side of the equation, known as the **ionic product**, is higher than the K_{sp} value, the substance will precipitate, i.e., the equilibrium represented by Equation (i) will shift toward left. But if the K_{sp} is high enough for

the salt for the ionic product to exceed it, the ions will remain as dissolved in the solution and the substance is called to be highly soluble in water. At equilibrium, the two are equal i.e., the ionic product is equal to the solubility product, K_{sp}.

All soluble salts have their own K_{sp} values which is a constant quantity at a given temperature but the real importance of K_{sp} comes when the salt is only **sparingly soluble,** and it is hard to measure the concentration of the dissolved ions. A sparingly soluble salt has a low concentration of dissolved ions in its aqueous solution.

As given in Equation (ii), all we need to know to find the value of K_{sp} of silver chromate salt is the concentration of the two ions. **From Equation (i), we know that the silver ion is double the concentration of the chromate ion.** Thus, if the chromate ion concentration is x, the silver ion concentration using stoichiometry in equation (i) will be $2x$. Then the value of K_{sp} using equation (ii) will be

$$K_{sp} = [2x]^2\,[x] = 4x^3 \text{ .....equation (iii)}$$

Practically speaking, we will measure the concentration of chromate ion, $[CrO_4^{2-}]$ in this experiment by spectrometric techniques. Since chromate ion is the only ion that is colored (yellow), this ion absorbs the light at 375 nm wavelength and by the application of **Beer's Law,** the concentration of the absorbing ion will be calculated. First we need to find the absorbance at that nanometer wavelength. The absorbance and the concentrations are related in the following equation according to Beer's law:

$$A = \varepsilon l C \text{ ..... equation (iv)}$$

Where, A = absorbance

ε = molar extinction coefficient which depends on the nature of the chemical and the wavelength of the light used

l = length of the path light must travel in the solution (in centimeters)

C = concentration of the chemical used.

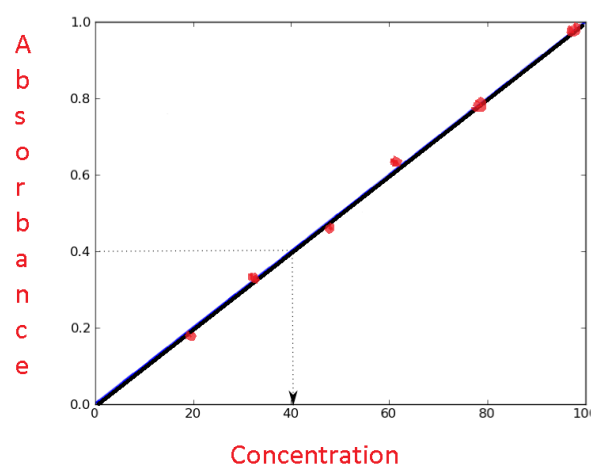

Figure 9.1: Beer's Law calibration curve

A solely depends on the concentration of the chemical species absorbing the light **s**ince **ε** and ***l*** are constant for the given experiment. Since the absorbance is directly proportional to the concentration of the species, a graphical curve under standard conditions (calibration curve) will be used to find the matching concentration of the solution for the measured absorbance. A sample calibration curve is given in **Figure 9.1.**

For your reference and to find the percentage error, the given value of solubility product constant, K_{sp} for silver chromate at 25ºC is 1.9×10^{-12}. The units of K_{sp} are omitted for simplicity.

Name _____

Experiment 9 | Solubility Product of a Slightly Soluble Salt

Pre-laboratory Questions

Complete this page before coming to the lab. Read the information given to answer the following questions.

Q1. What is a salt? How are salts formed?

Q2. Explain a sparingly soluble salt on the basis of ionization.

Q3: From the stoichiometric information given in the Introduction section if the chromate ion concentration in an aqueous solution of silver chromate is 0.98M, calculate the value of solubility product constant, K_{sp}.

.

Q4: If the concentration of a salt solution is increased, what will happen to the amount of light it absorbs? Explain on the basis of Beer's Law.

Q5: Why is it necessary to create a calibration curve before measuring the absorbance of the solution of unknown concentration?

***Instructor's approval*_____**

Materials and Chemicals

Vernier Spectrometer, computer interface, burette stand with clamp, 50-mL burette, 0.0024M K_2CrO_4 solution, 0.25M $NaNO_3$ solution, glass or plastic cuvettes, 0.004M $AgNO_3$ solution, 2 100-mL beakers, pipet pump and 10-mL pipet, centrifuge, test tubes and test tube rack.

Procedure

Part A: Calibration Curve

1. Bring the spectrometer and the computer interface and connect the spectrometer to the interface.

2. Bring a clean and dry burette. Rinse it with a little amount of the provided 0.0024M standard K_2CrO_4 solution, set up the burette onto the clamp. Add 50 mL K_2CrO_4 solution (up to zero mark). Record the strength of the solution on the data page.

3. Bring four 100 mL clean and dry volumetric flasks. Using the burette, tap out 3 mL, 6 mL, 9 mL, and 12 mL of K_2CrO_4 solution into the four flasks, respectively.

4. Bring the provided 0.25M $NaNO_3$ solution and record its concentration on the data page. Add this solution to each of the flasks to reach the 100-mL mark. Stoper the flasks and mix the solutions.

5. Calculate the concentration of K_2CrO_4 solution in each of these flasks using the dilution equation $M_1V_1 = M_2V_2$ on the space provided on the data page and record the values on the table.

6. Bring the provided cuvettes and make sure they are clean and dry. There should be no dust or paper lint on the transparent sides of the cuvettes. Fill ¾ full one cuvette with the 0.25M $NaNO_3$ solution. This is your *blank.*

7. To calibrate the spectrometer:

   - Place the blank into the cuvette slot so that the light passes through the clear side of the cuvette. (Make sure you practice this anytime you place a cuvette into the slot. If you position the cuvette wrong way, no light will pass into the cuvette.)
   - Choose New from the File menu. From the Experiment menu choose Calibrate. When the dialog box displays "Warmup Complete", click OK.

8. To determine the optimum wavelength:

   -Remove the blank from the slot. Discard the content properly and clean and shake dry. Fill it with the 0.0024M K_2CrO_4 solution from the burette and place it into the cuvette slot.
   - Click ▶ Collect. The spectrum will be displayed. Click ■ Stop.
   - Click the "Configure Spectrometer Data Collection" icon.
   - Under the Set Collection Mode, Click Abs vs Concentration. The wavelength of maximum absorbance around 375 nm is automatically identified. Click OK.

9. To create the calibration curve:
   - Click ▶ Collect.
   - Place the solution #1 into the clean cuvette, place the cuvette into the slot. When the absorbance readings stabilize, Click Keep and type the concentration of #1 in the edit box.

Press ENTER key. The concentration and the absorbance will be plotted on the graph. Write the absorbance value next to the concentration on the data table.

- Similarly place the solution #2, 3, and 4 and similarly record the absorbance values on the data page. You will also see those concentration versus absorbance data points on your interface curve.
- Click ■ Stop.
- On the graph, Click the Linear Regression button. This will give you a best fit straight line through the four absorbance points. This is your calibration curve.
- Alternatively, plot the Concentration versus Absorbance values in your spreadsheet and choose the correct graph style to give you the best fit curve. This is your calibration curve graph. Print this graph for submission with the lab report.

Part B: Calculation of K_{sp}

1. Bring two 100-mL clean and dry beakers.

2. From the burette, tap out exactly 5 mL 0.0024M standard K_2CrO_4 solution into each beaker.

3. Using a pipet bulb and a pipet, add exactly 5mL of 0.004M $AgNO_3$ solution into each beaker. These two beakers are your Trials 1 and 2 for measuring the chromate ion concentration.

4. Using clean glass stirring rods, stir the two solutions periodically for 10 minutes.

5. Transfer the liquids into suitable sized test tubes and centrifuge.

6. Discard the liquid and retain the precipitate at the bottom. To each test tube, add 2 mL of 0.25M $NaNO_3$ solution. Shake the test tubes well for 10 minutes and centrifuge again. There should be some precipitate left at the bottom of each test tube. If not, the solution did not reach the equilibrium. You may need to start over.

7. Transfer the pale, yellow liquid from each test tube into a cuvette and measure the absorbance as done in Part A. Record your observation for the absorbance.

8. Using the calibration curve, find the concentration of the chromate ion in each trial.

9. Follow the calculation steps to finally find out the solubility product constant K_{sp} for potassium chromate.

Clean-up and dispose of the chemicals as directed. Clean the apparatus properly and let them dry on the rack.

Date _____

Name _____

Lab Partner _____

Experiment 9 | Solubility Product of a Slightly Soluble Salt

Data Sheet

Part A: Calibration Curve

Provided initial strength of the K_2CrO_4 solution _____

Provided initial strength of the $NaNO_3$ solution _____

Calculate the final strength of the K_2CrO_4 solution in the four volumetric flasks and post the answers on the final column below:

Flask #	Volume of K_2CrO_4 (V_1)	Initial strength of K_2CrO_4 (M_1)	Final volume (V_2)	Final Strength of the K_2CrO_4 solution (M_2)	Absorbance
1	3 mL	0.0024M	100 mL		
2	6 mL	0.0024M	100 mL		
3	9 mL	0.0024M	100 mL		
4	12 mL	0.0024M	100 mL		

Transfer the data of M_2 versus Absorbance into spreadsheet and plot the graph. Choose a suitable graph style to find a best fit straight line for the points plotted.

Part B: Calculation of K_{sp}

Volume of 0.0024M K_2CrO_4 Trial 1 _____ Trial 2 _____

Volume of 0.004M $AgNO_3$ Trial 1 _____ Trial 2 _____

Volume of 0.25M $NaNO_3$ after centrifuging Trial 1 _____ Trial 2 _____

Measured Absorbance for the pale-yellow liquid Trial 1 _____ Trial 2 _____

Concentration of $[CrO_4^{2-}]$ from the calibration curve Trial 1 _____ Trial 2 _____

Average value of $[CrO_4^{2-}]$ _____ = x

Calculate K_{sp} below (Use equation iii)

K_{sp} value (calculated above) _____

Actual K_{sp} values for K_2CrO_4 _____

Calculate Percentage error

Percentage error _____

Experiment 10 | Thermodynamically Controlled Reaction of Borax

Objective: 1. To prepare saturated solutions of borax at different temperatures
2. To titrate the saturated solutions with the known solution of an acid
3. To calculate the K_{sp} value for borax using the solubility product constant equation
4. To calculate the values of ΔH^o, ΔS^o, ΔG^o based on ln K_{sp} Vs Temperature graph

Introduction

Just like the silver chromate salt, Ag_2CrO_4, you used in experiment 9, borax is a sparingly soluble salt. The molecular formula of borax is little complex as given below:

$$\mathbf{Na_2[B_4O_5(OH)_4] \cdot 8H_2O}$$

The full name of this salt is sodium tetraborate decahydrate. Sodium, $\mathbf{Na^+}$, is obviously the positive cation and the tetraborate, $\mathbf{B_4O_5(OH)_4^{2-}}$, is the negative anion. Octahydrate refers to a salt having eight waters of crystallization as represented by the "dot $8H_2O$". This salt slightly dissolves in water and ionizes to give following solid-solution equilibrium:

$$\mathbf{Na_2[B_4O_5(OH)_4] \cdot 8H_2O \rightleftharpoons 2Na^+(aq) + B_4O_5(OH)_4^{2-}(aq) + 8H_2O} \text{.....equation (i)}$$

And the K_{sp} expression for such equilibrium is given by

$$\mathbf{K_{sp} = [Na^+]^2\,[B_4O_5(OH)_4^{2-}]} \text{.....equation (ii)}$$

Unlike Experiment 9, we do not use spectroscopic technique here to find the concentration of the tetraborate ion, $B_4O_5(OH)_4^{2-}$. Instead, we use titration method. The tetraborate ion is a base, so we use an acid, conveniently, the common HCl to titrate this ion. From the known concentration of HCl, we can calculate the concentration of the tetraborate ion stoichiometrically as assisted by the following neutralization reaction:

$$\mathbf{B_4O_5(OH)_4^{2-}(aq) + 2HCl(aq) + 3H_2O \rightarrow 4B(OH)_3(aq) + 2Cl^-(aq)} \text{.....equation (iii)}$$

According to the above balanced chemical equation (iii), for every 1 mol of the tetraborate ion, we need 2 moles of HCl i.e., the molar ratio of tetraborate to HCl is 1:2. You learned this type of calculation in University Chemistry I course. Here is the set-up you will need to use for 0.5M HCl solution

$\mathbf{[B_4O_5(OH)_4^{2-}] =}$

$$\frac{0.5\ mol\ HCl}{L} \times \frac{mL\ of\ HCl\ used\ in\ Titration}{1} \times \frac{1\ mol\ tetraborate}{2\ mol\ HCl} \times \frac{1}{mL\ of\ tetraborate\ used}$$

.....equation (iv)

The answer calculated from equation (iv) will be in molarity, M. If the tetraborate concentration is x, the sodium ion concentration using stoichiometry in equation (i) will be $2x$. Then the value of K_{sp} using equation (ii) will be

$$K_{sp} = [2x]^2\,[x] = 4x^3 \text{ ……..equation (v)}$$

After finding the solubility product constant, K_{sp} measured at different Kelvin temperatures, T, which is conveniently represented as K_T, we can calculate the fundamental thermodynamic quantities: ΔH^o, ΔS^o, ΔG^o, which are respectively, the standard enthalpy change, standard entropy change, and standard free energy change for a thermodynamically controlled reaction such as the borax equilibrium. The ΔG^o at certain temperature T is related to the constant K as follows:

$$\Delta G^o = -RT \ln K_{sp} \text{ ……..equation (vi)}$$

Where, $\boldsymbol{R}$ is the universal gas constant, with the value of **0.083 L atm mol^{-1} K^{-1}**. And form the *Thermodynamic Equation* under standard conditions gives the relationship of the three fundamental quantities as

$$\Delta G^o = \Delta H^o - T\,\Delta S^o \text{ ……..equation (vii)}$$

Equating (vi) and (vii), we get:

$$-RT \ln K_{sp} = \Delta H^o - T\,\Delta S^o$$

$$\ln K_{sp} = \left(\frac{-\Delta H^o}{R}\right)\left(\frac{1}{T}\right) + \frac{\Delta S^o}{R} \text{……..equation (viii)}$$

Equation (viii) is in the slope-intercept form $\boldsymbol{y = mx + b}$. Thus, plotting $\frac{1}{T}$ along x-axis and $\ln K_{sp}$ along y-axis will give a straight line with the slope $\frac{-\Delta H^o}{R}$ and y-intercept $\frac{\Delta S^o}{R}$

In this lab, you will make saturated solutions of borax at four different temperatures. The solutions will be titrated against standardized HCl solutions to calculate the tetraborate concentrations which will be used to calculate the K_{sp}. The ln K_{sp} and the corresponding temperatures will be plotted to create a graph in the form of $y = mx + b$. The thermodynamic quantities will be finally calculated.

Name _____

Experiment 10 | Thermodynamically Controlled Reaction of Borax

Pre-laboratory Questions

Complete this page before coming to the lab. Read the information given to answer the following questions.

Q1. How is this lab similar to the previous lab #9? What different will we do it here?

Q2. What are the three fundamental thermodynamic quantities we are calculating in this lab? How are the three related in a formula?

Q3. Calculate using equation (iv), the tetraborate concentration if we use 5 mL of borax solution and 10 mL of HCl solution is used in the titration.

Q4. Calculate K_{sp} if the tetraborate concentration is 1.003×10^{-3}M.

Q5. What gives the slope of the plot and the y-intercept in the formula given by the equation (viii)?

***Instructor's approval*_____**

Materials and Chemicals

Borax, heat plate, ice, three 400-mL beakers (one for ice bath and two for hot water baths) four 250-mL Erlenmeyer flasks, four thermometers, four 125-mL Erlenmeyer flasks, four 10 mL pipets and pipet pumps, burette, burette stand and clamp, 0.5M HCl solution, Bromocresol blue indicator solution,

Procedure

Part A: Preparation of Equilibrium Solutions

1. In a 1000-mL beaker, start heating tap-water in the medium heat setting. This is your rinsing water for apparatus to get rid of borax when needed.
2. Bring four 250-mL Erlenmeyer flasks, label them as 1, 2, 3, and 4. Into each of these flasks, add 6.0 grams of borax, 15 mL DI water, and stir with a glass rod for 10 minutes. While stirring is going on, the other partner should get the ice-bath and water-baths ready.
3. Ice-bath: in a 400-mL beaker, place half full ice and some tap water to cover the ice. The desired temperature of the ice-bath is 8-10°C.
4. Water bath: You need two water baths. Bring two 400-mL beakers and add half-full of tap water. Place each of the beaker on a hot plate on medium heating. Water bath I needs to be around 38-40°C and water bath II needs to be around 55-57°C. Control the knob in such a way that the water baths sit around this temperature. If too hot, throw some water, add some cold water and adjust the knob correctly.
5. After 10 minutes of stirring, check each flask for any undissolved solid. It is necessary that some solid is left undissolved. If not, add a pinch and keep stirring.
6. Flask 1: Place it in ice bath. Keep the content stirring. Once the temperature of the inside of the flask (not the bath) is 8-10°C, leave it undisturbed.
7. Flask 2: Use it for room temperature. The desired room temp is 23-25 ^{o}C. Insert a thermometer and let it sit on the table undisturbed.
8. Flask 3: Place it in the water bath I at 38-40°C. Keep stirring and if the solid dissolves, add more borax until some solid is left. Once you see some solid left even after stirring for a-while, leave it undisturbed.
9. Flask 4: Place it in the water bath II at 55-57°C. Do the same as in Flask 3. This flask may need more borax dissolved before some solid is left at the bottom.
10. Once the temperatures are relatively stable and some solid is left at the bottom record the actual temperature (the value can be slightly off the given range) of all four flasks on Table 1: Temperature Table of the data page.
11. The clear liquid with some solids at the bottom of the flask is your saturated solution in each flask at that temperature you just recorded. We need to transfer this liquid into separate flasks for titration.

Part B: Titration

12. Bring four clean 125-mL Erlenmeyer flasks, label them as 1, 2, 3, and 4.
13. Without disturbing the content, carefully pipet out 5 mL of clear solution from Flask 1 (250-mL, the one in the ice-bath) and place it in the empty Flask 1 (125-mL, you just brought).
14. Repeat the same for other three solutions from Flask 2, 3, and 4 and place them in the empty flasks 2, 3, and 4, respectively.
15. Add 15 mL DI water and a drop of bromocresol blue indicator solution into each flask. These are your tetraborate solution ready for titration.
16. After all four saturated solutions have been transferred, take out the flasks from the baths and add hot water in each of them so that the borax is not stuck at the bottom.

17. Rinse a clean burette with a little amount of 0.5M HCl solution. Fill the burette up to the zero mark and fix it onto the clamp.
18. Bring the flask 1 and place it under the burette with a white paper underneath. Record the initial level of HCl in the burette on Table 2 of the data page. Run the HCl solution until the blue indicator color changes to yellow. Record the final level of HCl.
19. Repeat for flasks 2, 3, and 4. Record all the values on Table 2 of the data page.
20. Rest is all calculation and graph. Follow the instructions on the data page.

Part C: Clean-up

21. Clean-up is important in this lab. Otherwise, you will not leave the apparatus usable next time.
22. Bring all the apparatus that used borax, solid or solution, or anything in contact. Put them all in the sink with face up.
23. Bring the 1000-mL beaker with hot water carefully to the sink. Pour hot water into all apparatus and use brush and glass rod to get all the borax out of the container. Dispose of any solid borax into the waste container. All the solutions can go down the drain.
24. Repeat washing with hot water if needed.
25. Finally, wash with soap and water and let them dry on the racks.

Date _____

Name _____

Lab Partner _____

Experiment 10 | Thermodynamically Controlled Reaction of Borax

Data Sheet

Table 1: Temperature Table

	Flask 1	Flask 2	Flask 3	Flask 4
Stable temperature (°C)				
Kelvin Temperature *T*				
1/*T*				

Table 2: Titration Table

	Flask 1	Flask 2	Flask 3	Flask 4
Volume of tetraborate solution				
Initial level of HCl in the burette				
Final level of HCl in the burette				
Volume of the HCl consumed				
Concentration of HCl used				

Using the information from **Table 2** and using the **equation (iv)** on the Introduction section calculate the tetraborate concentration for each flask below:

Flask 1:

Flask 2:

Flask 3:

Flask 4:

Now using the tetraborate concentration **(*x*)** and the **equation (v)** on the Introduction section calculate the K_{sp} and **ln** K_{sp} for each flask and fill the table 3 below.

<u>K_{sp} Calculation</u>

Flask 1:

Flask 2:

Flask 3:

Flask 4:

<u>ln K_{sp} Calculation</u>

Flask 1: Flask 2: Flask 3: Flask 4:

Table 3: 1/*T* *vs* ln K_{sp} Table

	$1/T$ (K^{-1})	$ln\ K_{sp}$
Flask 1		
Flask 2		
Flask 3		
Flask 4		

Plot the graph of **1/*T*** along x-axis and ***ln Ksp*** along y-axis. Print the graph to submit with the lab report.

From the graph, find out the slope and the y-intercept. If you choose the right graph, it will show the slope and the intercept automatically in the graph itself.

Slope = _____ Intercept _____

Use, Slope = $\frac{-\Delta H^o}{R}$, y-intercept = $\frac{\Delta S^o}{R}$ to calculate ΔH^o and ΔS^o. Use R = 8.314 J K^{-1} mol^{-1}

<u>Calculate ΔH^o</u> <u>Calculate ΔS^o</u>

Calculate ΔG^o using above values of ΔH^o and ΔS^o and at four different temperatures as given by the equation (vi)

ΔG^o Flask 1:

ΔG^o Flask 2:

ΔG^o Flask 3:

ΔG^o Flask 4:

Q1. How are ΔG^o values dependent upon temperature? Any correlation from the experiment?

Experiment 11 | Electrochemistry: Galvanic Cells and Electroplating

Objective: 1. To set-up the half-cells using proper electrodes and solutions
2. To calculate standard cell potential for galvanic cells made of those half-cells
3. To measure the standard cell potentials for the galvanic cells
4. To electroplate a metal using another metal using an electrolytic cell

Introduction

Electrochemistry is a branch of chemistry (or electricity) that studies the exchange between chemical energy and electrical energy which occurs at the interface of a chemical system and an electrical system (circuit). An **electrochemical process** either converts chemical energy from a chemical reaction into electrical energy or carries out a chemical reaction by using electrical energy. In any case, these two opposite processes are basically an exchange between electrical energy and chemical energy. All electrochemical processes have **redox reactions** in which one species loses electron(s) and another species gains electron(s). The species that loses electrons is oxidized and the one gains electrons is reduced. The process is also called **oxidation-reduction** reaction. Here is a good example of a redox reaction:

$$\mathbf{Zn\,(s) + CuSO_4\,(aq) \rightarrow ZnSO_4\,(aq) + Cu\,(s)}\ \text{.....equation (i)}$$

Here, Zn (s) gains 2 electrons to become $ZnSO_4$ (aq) = reduced = reduction
Cu from $CuSO_4$ (aq) loses 2 electrons to become free metal Cu (s) = oxidation = oxidized

Part A: Galvanic Cells (Voltaic Cells)

A galvanic cell or a voltaic cell is an **electrochemical cell** that generates electricity using a chemical reaction. When a redox reaction occurs, such as the one given by equation (i) above, the electrons flow through a conductor wire producing electric current. The reaction that occurs here is self-driven, meaning no external energy is required for the reaction to occur. The electrons are made to travel through an external circuit instead of directly passing the electrons through the reaction mixture in the container.

For a galvanic cell, we write a full redox reaction into its ionic form only. So, if we want to use above equation (i) for a galvanic cell, the ionic equation becomes:

$$\mathbf{Zn\,(s) + Cu^{2+}\,(aq) \rightarrow Zn^{2+}\,(aq) + Cu\,(s)}\ \text{.....equation (ii)}$$

To devise a galvanic cell, we first need to understand the two halves of a complete cell. Each half is called a half-cell. One half-cell contains one metal rod, called electrode dipped in a salt solution of the same metal. The other half-cell contains the other metal rod dipped in a salt solution of that metal.

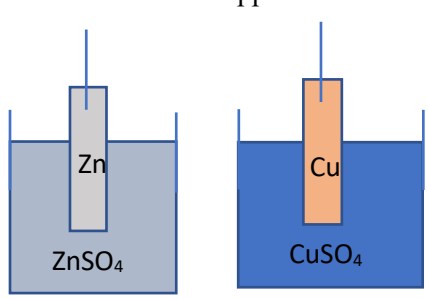

Figure 11.1: Two half-cells for Zn/Cu galvanic cell

To devise a galvanic cell from the redox reaction given by equation (ii), we need a zinc rod dipped in zinc sulfate solution and a copper rod dipped in copper sulfate solution. Two half-cells are shown in Figure 11.1. Since Zn is oxidized according to equation (ii), the half-cell containing Zn electrode in $ZnSO_4$ solution will be an oxidation half, and the zinc rod is also called anode where oxidation occurs. Similarly, the other half on the right side is the reduction half, where reduction occurs, and the copper electrode is called cathode.

The two half-cells are connected with a salt bridge to allow the ion exchange between the two solutions. If we connect the two half cells by joining the free ends of the wires from each electrode, a galvanic cell is conveniently constructed, which is shown in Figure 11.2 below. The voltmeter connected to the wire will show the voltage developed by this electrochemical cell.

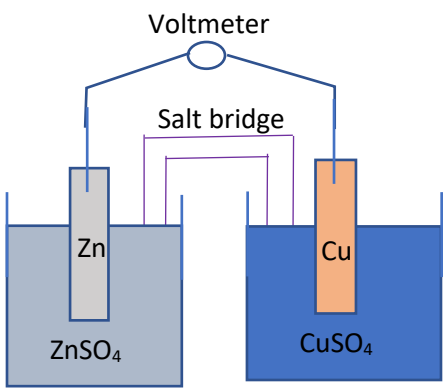

Figure 11.2: A full Zn/Cu galvanic cell, which is also called Daniel Cell

Part B: Electrolytic Cells

An **electrolytic cell** is a device which also runs a redox reaction inside, as in a voltaic cell, but that reaction is not a spontaneous one i.e. external source of energy is needed to run the reaction. As a result, electric current is not produced from the chemical reaction but from an external power source connected to the electrodes of the cell. One good example of electrolytic cell is an **electroplating** device, in which one metal coating applies to another metal using the redox-reaction principle. As shown in Figure 11.3 below, copper coating is applied to iron rod by dipping those two metals (electrodes) into the same solution and connecting externally to a battery. The battery provides power for the redox reaction between Cu and Fe metal interface and the charge is transferred through the solution as well as through the wire externally. Here too, oxidation occurs on the anode and the reduction occurs on the cathode, but the anode is positively charged, and the cathode is negatively charged.

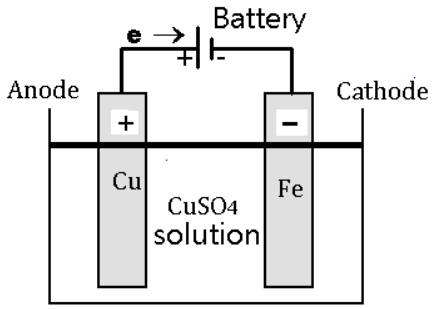

Figure 11.3: An electrolytic cell to electroplate an iron rod with copper

The comparison between a galvanic cell and an electrolytic cell is given Table 11.1 below.

Table 11.1: Comparison between properties of galvanic cells and electrolytic cells

Topic	Electrochemical Cell or Galvanic Cell or Voltaic Cell	Electrolytic Cell
Energy Conversion	Converts chemical energy into electrical energy.	Converts electrical energy into chemical energy or utilizes electrical energy to carry out chemical changes.
Redox Reaction	The redox reaction is spontaneous and is the main source of electrical energy produced.	The redox reaction is not spontaneous, and the external electrical energy has to initiate it
The Cell	The cell compartments are separate for two half-cells, connected by a salt bridge or a porous partition.	The reaction is carried out in the same container, no partition is used.
The Electrodes	The anode is negative, the cathode is positive.	The anode is positive, the cathode is negative.
Oxidation and Reduction	The oxidation occurs in anode. The reduction occurs in cathode.	The oxidation occurs in anode. The reduction occurs in cathode.
Source of Electrons	The chemical species getting oxidized supplies electrons.	The external battery supplies electrons.
Path of Electrons	The electrons move from anode to cathode in the external circuit.	The electrons enter the cell from the cathode and leave the cell from anode.
Application	Used as stand-alone source of electricity: dry-cells, torch light batteries, car batteries, Lithium-ion batteries,	Used for electroplating metals, purification of metals, extraction of pure metals from the ores, large-scale production of elements from their compounds.

<u>In Part A of this experiment:</u> You will learn to devise galvanic cells form different metals and their solutions. Using zinc, copper, iron, lead, silver, nickel, or other available metals, you will prepare half-cells with an appropriate salt solution. Those half-cells will then be connected to each other to form a complete galvanic cell. The cell potential will be measured using a voltmeter or a computer interface e. Using the standard reduction potential values, you will calculate the expected cell potential for your devised cell and compare the calculated values with the measured values. Here are some standard reduction potential values for some common metal/solution in Table 11.2 below.

Table 11.2: Standard Reduction Potential for Some Common Metals

Reduction Half Reaction	Standard Reduction Potential, E^o (Volts)
$Ag^+ + e^- \rightarrow Ag$	+0.80
$Cu^{2+} + 2e^- \rightarrow Cu$	+ 0.34
$Pb^{2+} + 2e^- \rightarrow Pb$	- 0.13
$Fe^{2+} + 2e^- \rightarrow Fe$	- 0.44
$Zn^{2+} + 2e^- \rightarrow Zn$	- 0.76
$Al^{3+} + 3e^- \rightarrow Al$	- 1.66
$Mg^{2+} + 2e^- \rightarrow Mg$	- 2.37

How to choose which is anode and which is cathode from the above table?

To choose which half-cell needs to be connected to the positive terminal and which half-cell to the negative terminal we need to follow the E^o values from Table 11.2. The metal with lower E^o value will be an anode and thus will be connected to the (-)ve terminal of the charge sensor. The metal with higher E^o value will be a cathode and will be connected to the (+)ve terminal of the charge sensor.

Once the cathode and the anode are decided in the constructed cell, we can calculate the E^o_{cell} ***using the following equation:***

$$E^o_{cell} = E^o_{cathode} - E^o_{anode} \text{ .....equation (iii)}$$

<u>In Part B of the experiment:</u> You will use an electrolytic cell to plate a metal on another metal. The metal having higher reduction potential easily plate on the metals having lower reduction potential. The wider the gap is the better plating occurs between those metal s. To choose which metal plates on which and also to choose which metal is taken as anode and which as cathode, the reference of the standard reduction potential values given in Table 11.2, and the table in your textbook, Table 18.1, page 185, will be helpful.

Name _____

Experiment 11 | Electrochemistry: Galvanic Cells and Electroplating

Pre-laboratory Questions

Complete this page before coming to the lab. Read the information given to answer the following questions.

Q1. What type of reactions do electrochemical process use?

Q2. What is the main difference between the reactions in a galvanic cell and those in electrolytic cells?

Q3. What is a half-cell? How do we devise a half cell for a Zn electrode?

Q4. Take the reference from Fig. 11.2 and Table 11.2 to decide which metal is anode and which is cathode while making a galvanic cell between Fe/Fe^{2+} and Al/Al^{3+}.

Q5. How do we know which metal becomes an anode and which a cathode in an electrolytic cell?

***Instructor's approval*_____**

Materials and Chemicals

Part A: Pure metal electrodes: Zn, Cu, Al, Fe, Pb, five 100-mL beakers, one 150-mL beaker, salt solutions: 1M each of $Zn(NO_3)_2$, $CuSO_4$, $Al(NO_3)_3$, Freshly prepared $FeSO_4$, $Pb(NO_3)_2$, DC voltmeter, wire with clips, 1.0M KNO_3 solution
Part B: 250-mL beaker, copper electrode, aluminum foil, 1.0 M $CuSO_4$ solution, wire with clips, 1.5V dry cell.

Procedure

Part A: Galvanic Cells

1. Bring five 100-mL beakers, wash them well and dry with a paper towel. Label them with the appropriate metal symbol. For example: the beaker used for Fe/Fe^{2+} half-cell should be labelled as *Fe*.
2. Bring the provided five salt solutions and pour 20 mL of the salt solution into the respective metal beakers.
3. Bring the voltmeter provided and connect the red wire to the positive terminal and the black (or other color wire) to the negative terminal.
4. Place each metal rod into the respective solution. These are your six half-cells. You will make total 15 cells using combinations of these half-cells.
5. In the 150-mL beaker, pour about 20mL 1.0M KNO_3 solution. This is your salt bridge solution. To make a salt bridge, you will need a paper towel of correct size. Dip it in the KNO_3 solution. The wet paper towel is your salt bridge.
6. Before starting to construct the cells using the half electrodes, plan well how you want to proceed with the combination of half-cells. Consider the following:
   A. Checking the Standard Reduction Potential Table, decide which is cathode and which is anode. This will help you with terminal connection, (+) wire or (-) wire?
   B. Make a good plan how you want to proceed with half-cell combinations. Which half-cell to take first and proceed further. There are fifteen different combinations possible out of six half-cells. The first one is done for you.
   C. Each time you make a cell using the two half-cells, use a new salt bridge. You will need 10 salt bridges for 10 cells.

Planning Table: Cell 1 is already planned for you.

Cell #	Combination	Anode	Cathode
Cell 1	Zn-Fe	Zn	Fe
Cell 2			
Cell 3			
Cell 4			
Cell 5			
Cell 5			
Cell 5			
Cell 5			
Cell 9			
Cell 10			

7. Cell 1: Attach the positive (+) wire from the voltmeter to the cathode = Fe (metal rod) with the clip. Attach the negative (-) wire from the charge sensor to the anode = Zn metal rod with the

clip. Set the voltmeter setting to the lowest number available. Connect the two half-cell's solutions with a salt bridge. Read the resulting voltage correctly from the voltmeter after it is stable. Record to the maximum significant figures possible.

8. Repeat this for all the rest of the combinations you chose without any mix-up or confusion. Make sure the half-cells and the salt bridge should not be contaminated. If there is a contamination, you may need to start over or may remake the half-cell that is contaminated and proceed.
9. Once finished, take the electrodes out, wash them with water well and wipe with dry paper towel.
10. Dispose of the solutions as directed and wash the beakers with soap and warm water.

Part B: Electroplating

1. Bring a clean 250-mL beaker. Add the provided 1.0 M $CuSO_4$ solution about 1/3rd full.
2. Bring a copper electrode and attach to the positive terminal of a battery with the wire with the clip.
3. Bring an aluminum foil piece about the same size as the copper electrode. Attach the foil with the clip to the negative terminal of the battery.
4. Dip the two electrodes into the copper sulfate solution of the beaker. Let it sit for 5 minutes.
5. You will start to see changes to the aluminum foil as well as the copper electrode. Record your observation on the data page.

Date _____

Name _____

Lab Partner _____

Experiment 11 | Electrochemistry: Galvanic Cells and Electroplating

Data Sheet

Part A: Galvanic Cells

Provided metal electrodes: _____

Provided salts _____

Measured E_{cell} Voltage Table

E_{cell} **(Volts)**	Zn/Zn^{2+}	Fe/Fe^{2+}	Al/Al^{3+}	Cu/Cu^{2+}	Pb/Pb^{2+}
Zn/Zn^{2+}	---				
Fe/Fe^{2+}	---	---			
Al/Al^{3+}	---	---	---		
Cu/Cu^{2+}	---	---	---	---	
Pb/Pb^{2+}	---	---	---	---	---

Now choose ONLY SIX cells out of the total fifteen measured E_{cell} you want to calculate the E^o_{cell} from above combinations. Mark those cells on the table above for your simplicity. Write Half-cell reactions.

Cell 1: Anodic half-cell reaction _____

Cathodic half-cell reaction _____

Cell 2: Anodic half-cell reaction _____

Cathodic half-cell reaction _____

Cell 3: Anodic half-cell reaction _____

Cathodic half-cell reaction _____

Cell 4: Anodic half-cell reaction _____

Cathodic half-cell reaction _____

Cell 5: Anodic half-cell reaction _____

Cathodic half-cell reaction _____

Cell 6: Anodic half-cell reaction _____

Cathodic half-cell reaction _____

Calculate the E^o_{cell} using above reactions as your guide to find the values in Table 11.2 in the Introduction section and using Equation (iii).

Cell Number	E^o_{cell} (Calculated)	E^o_{cell} (Measured)	Difference or % Error	Comments
1				
2				
3				
4				
5				
6				

Part B: Electroplating

Metal used as cathode _____

Metal used as anode _____

Terminal of the battery cathode was connected to _____

Terminal of the battery anode was connected to _____

Observation of the cathode after 5 minutes _____

Observation of the anode after 5 minutes _____

Brief comment on the observations _____

_____

How to write a formal lab report

A standard science lab report is a systematic report of your objectives, activities, observations of experiments, and the results; all summarized in a professional writing style.
It must include the following in the order given below:

1. **Your name, lab partner's name, date, and Instructor's name** (top right corner of the page)
2. **Experiment Number and Title** (must write the experiment # and the title of the experiment at the top, center of the page
3. **Objective** (what is your main goal, must include any calculation you need to do in this experiment)
4. **Materials/chemicals** (numbered or separated by commas)
5. **Procedure** (stepwise or paragraph explanation of what you did, past passive tense, must be detailed, not just five/six sentences)
6. **Observation** (what happened during the experiment, scientifically important ones- example: color change, gas evolution, sound, any change from start to end, temperature, and many more…)
7. **Discussion** (your logic or scientific reasoning as to why things happened as observed in Step 6)
8. **Conclusion** (a brief summary of the experiment, calculated values must be mentioned here, mainly addressing the need of Step 3: Objective)

#4 (Procedure) and #5 (Observation) should be written in *past passive* sentences.
<u>What are examples of past passive sentences?</u> (Suppose you heated 200 mL water in a 250 mL beaker. Here's how you should write the procedure)

A 250 mL beaker <u>was taken,</u> and 200 mL water <u>was poured</u> into it from a measuring cylinder. (Don't write: <u>I took</u> a 250 mL beaker and <u>poured</u> 200 mL of water in it. Also, don't write: <u>Took</u> 250 mL beaker, <u>poured</u> 200 ml water). *The water <u>was</u> <u>then heated</u> until the temperature reached to 60ºC.* (Don't write: <u>Heat</u> the water to 60ºC). *After heating, the beaker <u>was allowed</u> to cool for 10 minutes and then <u>was removed</u> from the heating set-up by using a beaker tong.* (Don't write: <u>Cooled</u> for 10 minutes and <u>removed</u> from the heating set-up by using a beaker tong. OR: <u>Cool</u> for 10 minutes and <u>remove</u> from …).

Warning: Do not copy the Procedure from this laboratory manual. Summarize what you did during the experiment in your own language.

Below is the format you should follow. The length of the report depends on the experiment you have performed.

Laboratory Report Format

Experiment #: Title of the experiment

Date: _____ **Instructor:** _____

Name _____ **Lab Partner**_____

Objective:

Materials:

Procedure: *(Describe your experimental activity systematically and in the chronological order, must use Past Passive Tense.)*

Observations: *(What you found, what you observed, what changes you saw during the process)*

Discussion: (*Analyze and discuss your findings, scientifically).*

Conclusions: (*Summarize your findings directly connecting to your Objectives)*

References

1. Zumdahl, Steven S., and Zumdahl, Susan A., *Chemistry,* **2014,** Brooks/Cole Cengage Learning.
2. Hall, James F., *Experimental Chemistry*, Seventh Edition, **2007**, Houghton Mifflin Company.
3. Volz, Donald L., Smola, Ray, *Investigating Chemistry through Inquiry*, **2009**, Vernier Software and Technology.
4. Nelson, John H., Kemp, Kenneth C., Stoltzfus, Matthew, Lufaso, M., *Laboratory Experiments Chemistry the Central Science*, **2015**, Pearson Education Inc.
5. Chem.libretexts.org/Bookshleves Electrochemistry/Electrolytic Cells **2020** August update.
6. Randall, J., *Advanced Chemistry with Vernier: Experiments for AP, IB, and College General Chemistry*, **2004**, Vernier Software Technology.
7. March, J. *Experiment 16*, **2011**, Department of Chemistry, University of Wisconsin.
8. Zumdahl, Steven S., and Zumdahl, Susan A., *An Atoms First Approach to the General Chemistry Laboratory,* **2016**, Brooks/Cole Cengage Learning.
9. Paradis, J. *Hands-on Chemistry Laboratory Manual* **2005** McGraw-Hill Science/Engineering/Math